Calhoun: The NPS Institutional Archive

DSpace Repository

Theses and Dissertations | 1. Thesis and Dissertation Collection, all items

1975

Structures, analysis and design of N-dimensional recursive digital filters.

Souchon, Lennart

Monterey, California. Naval Postgraduate School

http://hdl.handle.net/10945/21061

Downloaded from NPS Archive: Calhoun

http://www.nps.edu/library

Calhoun is the Naval Postgraduate School's public access digital repository for research materials and institutional publications created by the NPS community. Calhoun is named for Professor of Mathematics Guy K. Calhoun, NPS's first appointed -- and published -- scholarly author.

Dudley Knox Library / Naval Postgraduate School
411 Dyer Road / 1 University Circle
Monterey, California USA 93943

STRUCTURES, ANALYSIS AND DESIGN OF N-DIMENTIONAL RECURSIVE DIGITAL FILTERS

Lennart Souchon

DUDLEY KNOX LIBRARY
NAVAL POSTGRADUATE SCHOOL
MONTEREY, CALIFORNIA 93943-5101

NAVAL POSTGRADUATE SCHOOL
Monterey, California

THESIS

STRUCTURES, ANALYSIS AND DESIGN
OF N-DIMENSIONAL RECURSIVE DIGITAL FILTERS

by

Lennart Souchon

December 1975

Thesis Advisor: S.R. Parker

Approved for public release; distribution unlimited.

UNCLASSIFIED

SECURITY CLASSIFICATION OF THIS PAGE (When Data Entered)

REPORT DOCUMENTATION PAGE		READ INSTRUCTIONS BEFORE COMPLETING FORM
1. REPORT NUMBER	2. GOVT ACCESSION NO.	3. RECIPIENT'S CATALOG NUMBER
4. TITLE (and Subtitle) Structures, Analysis and Design of N-Dimensional Recursive Digital Filters		5. TYPE OF REPORT & PERIOD COVERED Ph.D. Dissertation December 1975 6. PERFORMING ORG. REPORT NUMBER
7. AUTHOR(s) Lennart Souchon		8. CONTRACT OR GRANT NUMBER(s)
9. PERFORMING ORGANIZATION NAME AND ADDRESS Naval Postgraduate School Monterey, California 93940		10. PROGRAM ELEMENT, PROJECT, TASK AREA & WORK UNIT NUMBERS
11. CONTROLLING OFFICE NAME AND ADDRESS Naval Postgraduate School Monterey, California 93940		12. REPORT DATE December 1975 13. NUMBER OF PAGES 337
14. MONITORING AGENCY NAME & ADDRESS(if different from Controlling Office)		15. SECURITY CLASS. (of this report) Unclassified 15a. DECLASSIFICATION/DOWNGRADING SCHEDULE

16. DISTRIBUTION STATEMENT (of this Report)

Approved for public release; distribution unlimited.

17. DISTRIBUTION STATEMENT (of the abstract entered in Block 20, if different from Report)

18. SUPPLEMENTARY NOTES

19. KEY WORDS (Continue on reverse side if necessary and identify by block number)

Recursive Digital Filters
Structures
Canonic Structures
Stability Analysis
Design
Z-Transform
Partial fraction expansion

20. ABSTRACT (Continue on reverse side if necessary and identify by block number)

Formulas for the general term of the Taylor series expansion (impulse response) of a multidimensional recursive digital filter are developed. Of particular interest is a non-recursive combinatorial formulation involving the filter

DD FORM 1 JAN 73 1473 (Page 1) EDITION OF 1 NOV 65 IS OBSOLETE S/N 0102-014-6601

UNCLASSIFIED

SECURITY CLASSIFICATION OF THIS PAGE (When Data Entered)

(20. ABSTRACT Continued)

coefficients. These results are applied to develop several new specific stability criteria for low order two-dimensional filters, as well as for the development of some general filter design procedures to achieve a desired impulse response. Also included are some new filter structures and stability conditions for N-dimensional filters.

Structures, Analysis and Design of N-Dimensional Recursive Digital Filters

by

Lennart Souchon
Kapitänleutnant, Deutsche Marine
B.S.E.E., Naval Postgraduate School, 1972
M.S.E.E., Naval Postgraduate School, 1973

Submitted in partial fulfillment of the requirements for the degree of

DOCTOR OF PHILOSOPHY

from the
NAVAL POSTGRADUATE SCHOOL
December 1975

Thesis
S66612
c.2

MONTEREY, CALIFORNIA 93940

ABSTRACT

Formulas for the general term of the Taylor series expansion (impulse response) of a multidimensional recursive digital filter are developed. Of particular interest is a non-recursive combinatorial formulation involving the filter coefficients. These results are applied to develop several new specific stability criteria for low order two-dimensional filters, as well as for the development of some general filter design procedures to achieve a desired impulse response. Also included are some new filter structures and stability conditions for N-dimensional filters.

TABLE OF CONTENTS

I. INTRODUCTION ---------- 13

A. DIGITAL SIGNAL PROCESSING ---------- 13

B. AREA OF INVESTIGATION ---------- 23

C. PREVIEW OF RESULTS ---------- 24

II. METHODS TO DETERMINE STABILITY OF MULTI-DIMENSIONAL SYSTEMS ---------- 28

A. INTRODUCTION ---------- 28

B. METHODS TO DETERMINE STABILITY OF MULTI-VARIABLE SYSTEMS ---------- 30

C. SUMMARY ---------- 32

III. STRUCTURES AND STATE SPACE FORMULATION FOR N-DIMENSIONAL DIGITAL FILTERS ---------- 34

A. INTRODUCTION ---------- 34

B. STRUCTURES OF N-DIMENSIONAL DIGITAL FILTER -- 36

1. One-Dimensional Digital Filter Realization ---------- 36

2. Deductive Approach to Develop N-Dimensional Structures ---------- 38

C. STATE EQUATION FORMULATION ---------- 42

1. State Equation Formulation in Two-Dimensions ---------- 42

2. State Equations in N-Dimensions --------- 48

D. DISCUSSION OF CANONIC SECTIONS IN N-DIMENSIONS ---------- 49

E. SUMMARY ---------- 50

IV. SERIES METHOD TO DETERMINE STABILITY OF AN N-DIMENSIONAL RECURSIVE FILTER ---------- 67

A. INTRODUCTION ---------- 67

B. TAYLOR EXPANSION FORMULA IN N-VARIABLES ----- 69

C. GENERAL FORM OF THE N-DIMENSIONAL TAYLOR EXPANSION ---------- 72

1. Derivative Formula ---------- 73

2. Recursive Formula ---------- 73

3. Nonrecursive Formula ---------- 77

4. Nonrecursive Combinatorial Formula ------ 91

5. Comparison of Results ---------- 96

D. UNIT SAMPLE RESPONSE ---------- 98

V. APPLICATION OF SERIES METHOD FOR THE DERIVATION OF STABILITY CONDITIONS IN TWO-DIMENSIONS ---------- 101

A. INTRODUCTION ---------- 101

B. UNCOUPLED FILTER ---------- 102

1. Third Order Uncoupled Transfer Function - 106

a. Unit Sample Response ---------- 106

b. Summation of Absolute Entries of $\underline{\underline{A}}$ -- 110

c. Necessary and Sufficient Stability Conditions for $\alpha_{20} > -\frac{\alpha_{10}^2}{4}$ Using Ultraspherical Polynomial Method ---- 111

(1) Stability Conditions for $\alpha_{20} \geq 0$ ---------- 111

(2) Stability Conditions for $0 > \alpha_{20} \geq -\frac{\alpha_{10}^2}{4}$ ---------- 113

d. Sufficient Stability Conditions for $\alpha_{20} < -\frac{\alpha_{10}^2}{4}$ ---------- 117

e. Improved Sufficient Stability Conditions for $\alpha_{20} < -\frac{\alpha_{10}^2}{4}$ ---------- 119

2. Fourth Order Transfer Function ---------- 121

a. Unit Sample Response ---------- 121

b. Summation of Absolute Entries of Unit Sample Response $\underline{A}$ ---------- 121

(1) Necessary and Sufficient Stability Conditions ---------- 126

(2) Sufficient Stability Conditions - 130

C. COUPLED FILTER ---------- 132

1. Second Order Coupled (Bilinear) Filter -- 132

a. Unit Sample Response $\underline{A}$ ---------- 132

b. Sum of Absolute Entries of $\underline{A}$ -------- 133

2. Discussion ---------- 135

VI. NECESSARY OR SUFFICIENT STABILITY CONDITIONS IN N-DIMENSIONS ---------- 138

A. INTRODUCTION ---------- 138

1. Necessary and Sufficient Stability Conditions for Positive Characteristic Equation Coefficients in Two-Dimensions - 138

2. Sufficient Stability Conditions in Two-Dimensions ---------- 141

3. Necessary Stability Conditions in Two-Dimensions ---------- 141

B. COEFFICIENT SPACE ---------- 142

C. NECESSARY CONDITIONS ---------- 144

D. SUFFICIENT CONDITIONS ---------- 147

E. SYMMETRY CONDITIONS ---------- 148

VII. NECESSARY AND SUFFICIENT CONDITIONS IN N-DIMENSIONS ---------- 156

A. INTRODUCTION ---------- 156

B. METHOD TO DERIVE NECESSARY AND SUFFICIENT STABILITY CONDITIONS ---------- 156

C. EXAMPLE 7.1: FIRST ORDER TRANSFER FUNCTION IN N-DIMENSIONS ---------- 157

D. EXAMPLE 7.2: N-DIMENSIONAL TRANSFER FUNCTION WITH POSITIVE COEFFICIENT DENOMINATOR POLYNOMIAL ---------- 159

E. SUMMARY ---------- 159

VIII. PROPAGATION OF TRANSFER FUNCTION COEFFICIENTS IN THE UNIT SAMPLE RESPONSE OF N-DIMENSIONAL FILTER ---------- 162

A. INTRODUCTION ---------- 162

B. PROPAGATION RULES IN N-DIMENSIONS ---------- 163

1. Propagation Rule for $a_{(\bar{S}_p)}$ where $(\bar{S}_p) > (\bar{n})$ ---------- 165

2. Propagation Rule for $a_{(\bar{S}_p)}$ where $(\bar{S}_p) = (\bar{n})$ ---------- 166

3. Propagation Rule for $a_{(\bar{S}_p)}$ where $(\bar{S}_p) < (\bar{n})$ ---------- 172

C. PROPAGATION DIAGRAMS FOR TWO-DIMENSIONAL TRANSFER FUNCTIONS UP TO THE SIXTH ORDER COUPLED CASE ---------- 174

D. SUMMARY ---------- 176

IX. EXTRACTION OF TRANSFER FUNCTIONS FROM A GIVEN UNIT SAMPLE RESPONSE ---------- 190

A. INTRODUCTION ---------- 190

B. EXTRACTION OF AN ALL-POLE TRANSFER FUNCTION FROM A GIVEN UNIT SAMPLE RESPONSE - 191

C. COMPUTER ALGORITHM FOR THE EXTRACTION OF AN N-DIMENSIONAL ALL-POLE TRANSFER FUNCTION FROM A GIVEN UNIT SAMPLE RESPONSE - 192

D. EXTRACTION OF A RATIONAL TRANSFER FUNCTION - 198

E. EXTRACTION OF A PARALLEL ARRANGEMENT OF LOW ORDER ALL-POLE OR RATIONAL TRANSFER FUNCTION ---------- 209

F. EXAMPLE 9.7 FOR E ---------- 213

G. DISCUSSION ---------- 216

X. DESIGN OF N-DIMENSIONAL RECURSIVE DIGITAL FILTER ---------- 230

A. INTRODUCTION ---------- 230

B. TIME-DOMAIN DESIGN EXAMPLES ---------- 231

1. Example 10.1: All-Pole Transfer Function ---------- 231

2. Example 10.2: Rational Transfer Function ---------- 232

3. Example 10.3: Parallel Arrangement of Low Order Transfer Functions ----- 233

C. COMMENTS ON FREQUENCY-DOMAIN DESIGN TECHNIQUES FOR RECURSIVE DIGITAL FILTER - 234

D. SUMMARY ---------- 241

APPENDIX A. GENERALIZED FILTER THEORY ---------- 242

A. DEFINITIONS ---------- 242

1. N-Dimensional Signal ---------- 242

2. Linear, Shift-Invariant, Causal System ---------- 242

3. Convolution ---------- 244

4. Separability ---------- 245

B. Z-TRANSFORM ---------- 246

1. Definition ---------- 246

2. Properties ---------- 248

3. Inverse Z-Transform ---------- 250

C. RECURSIVE EQUATION ---------- 251

D. TRANSFER FUNCTION ---------- 253

E. SEPARABLE TRANSFER FUNCTION ---------- 255

APPENDIX B. PROOF: N-VARIABLE POLYNOMIAL IN GENERAL NOT FACTORABLE ---------- 258

APPENDIX C. PROOF: NECESSARY AND SUFFICIENT CONDITIONS FOR BIBO-STABILITY ---------- 260

APPENDIX D. SOME IMPORTANT CHARACTERISTICS OF ULTRASPHERICAL POLYNOMIALS ---------- 262

A. EVEN/ODD FUNCTION CHARACTERISTIC -------- 263

B. DERIVATION OF SECOND ORDER DIFFERENTIAL EQUATION TO WHICH $C_n^{\nu}(x)$ IS A PARTICULAR SOLUTION ---------- 263

C. ROOTS OF $C_n^{\nu}(x)$ ---------- 265

D. REPRESENTATION OF $C_n^{\nu}(x)$ AS A FINITE SUM ---------- 266

APPENDIX E. MEMORY REQUIREMENTS FOR TWO-DIMENSIONAL RECURSIVE DIGITAL FILTER ---------- 270

APPENDIX F. METHOD TO DETERMINE CANONIC STRUCTURES FOR FULL QUADRATIC TWO-DIMENSIONAL TRANSFER FUNCTIONS ----- 272

APPENDIX G. LOW ORDER TWO-DIMENSIONAL STRUCTURES --- 277

APPENDIX H. COORDINATE TRANSFORMATIONS ---------- 293

APPENDIX I. APPLICATION OF SERIES METHOD FOR THE DERIVATION OF STABILITY CONDITIONS IN TWO-DIMENSIONS ---------- 295

A. THIRD ORDER (UNCOUPLED FILTER) ---------- 295

1. Unit Sample Response ---------- 295

2. Sum of Absolute Entries of the Unit Sample Response ---------- 298

3. Improved Stability Conditions for Third-Order Uncoupled Filter in Two-Dimensions, where $\alpha_{20} < -\frac{\alpha_{10}^2}{4}$ ---------- 301

B. SUM OF ABSOLUTE ENTRIES OF THE UNIT SAMPLE RESPONSE OF A FOURTH ORDER (UNCOUPLED) FILTER ---------- 306

C. COUPLED FILTER: SECOND ORDER COUPLED (BILINEAR) FILTER ---------- 312

APPENDIX K. SUMMATION OF DOUBLE SERIES (CAUCHY) ---- 315

APPENDIX L. PROOF THEOREM APPENDIX I ---------- 319

APPENDIX M. ROUCHE'S THEOREM AND PROOFS OF CHAPTER VI ---------- 321

A. CONSEQUENCE OF ROUCHE'S THEOREM -------- 321

B. PROOF THEOREM 6.1 ---------- 321

C. PROOF OF THEOREM 6.2 AND THEOREM 6.3 ---- 323

D. PROOF THEOREM 6.4 ---------- 324

APPENDIX N. PROOFS OF CHAPTER VII ---------- 326

A. PROOF OF THEOREM 7 ---------- 326

B. PROOF OF COROLLARY 7 ---------- 326

LIST OF REFERENCES ---------- 328

INITIAL DISTRIBUTION LIST ---------- 334

ACKNOWLEDGEMENT

I am fortunate to have this opportunity to thank the many people who have helped in the preparation of this thesis. First of all I am most indebted to my advisor, Dr. Sydney R. Parker, for his guidance and motivation. Also, I wish to express my sincere gratitude to Dr. Daniel Davis for his convivial support and for being a constant source of ideas. I am also very grateful to Dr. Kai E. Wöhler for his advice and comments on many subject matters closely related to the preparation of this thesis.

I wish to acknowledge the patience and assistance of my wife, Ute. She has been a continuous source of inspiration.

I want to thank the Federal German Navy for the generous opportunity to pursue the doctoral program.

I wish to thank Dr. C. Rothauge, Dr. D.E. Kirk and the Department of Electrical Engineering for their support and for providing me with a table top computer.

Last but not least I should also like to thank Mrs. Georgia Lyke, of the Dudley Knox Library and Mrs. Rosemary Lande for her excellent typing.

I. INTRODUCTION

A. DIGITAL SIGNAL PROCESSING

Digital signal processing has its roots in 16th century mathematics especially in the fields of astronomy and compilation of mathematical tables. Today it has become a powerful tool in a multitude of diverse fields of science and technology. The application of digital signal processing varies from low-frequency spectrum seismology through spectral analysis of speech and sonar into the video spectrum of radar systems [1].

Rabiner and Gold have interrelated in their excellent book on "Theory and Application of Digital Signal Processing" (see Ref [2]) digital processing theory,
with a variety of applications ranging from radar, sonar, communication, music, seismic and medical signal processing, and, with digital component technology. This technology is the main driving force for progress in this field as well as the general area of computer design. It is also observed by them that although the formulation of engineering problems is often as vague as those of the "softer" sciences (such as anthropology, psychology, etc.) the execution of these problems appears to depend on greater and greater accuracy and reproducibility. The capability of digital systems to achieve a guaranteed accuracy and essentially perfect reproducibility is very appealing to engineers.

A digital filter is defined in [3] to be a computational process or algorithm by which a digital signal or equivalently a sequence of numbers acting as input, is transformed into a second sequence of numbers or output digital signal, where the term 'digital' implies that both time (the independent variable) and amplitude are quantized. A digital signal is said to be a discrete signal whenever the amplitude quantization step of a time sampled signal is zero.

The field of one-dimensional digital filtering, which is outlined in Figure 1.1, encompasses recursive, nonrecursive and Fast-Fourier Transform processing. The terms recursive and nonrecursive, instead of IIR (Infinite Impulse Response) and FIR (Finite Impulse Response) are preferred in the context of this realization oriented thesis. Kaiser showed in [4] that recursive processing is much more efficient than nonrecursive processing. Stockham's [5] method to perform fast convolution, which later became known as FFT method, improved the efficiency of nonrecursive techniques, so that comparisons in one-dimension are no longer strongly biased toward recursive methods [2].

One-dimensional recursive digital filter design depends stongly on the effective and well developed continuous filter design theory. Moreover, the stability analysis of higher order one-dimensional recursive realizations can be solved by investigation of the root distribution of its factored form representation. It is important to realize that continuous domain design techniques and the factorization

property (the fundamental theorem of algebra) exist only in one-dimension.

Areas of applications of one-dimensional digital processing are listed in Figure 1.1. There are important military, and specifically naval applications in addition to those listed, such as missile and torpedo guidance, launcher control system, fire control, combat information collections, dissemination and display.

Digital filtering in several dimensions, which is overviewed in Figure 1.2, has gained considerable importance, especially for the two-dimensional case. Figure 1.3 displays an example of two-dimensional low-pass and high-pass filtering. Until 1966, two-dimensional digital filtering was implemented by nonrecursive or convolutional techniques. In this method the output is the weighted sum of unit sample responses of all past input values. The serious disadvantage of the convolutional method is the requirement of a very large number of arithmetic operations. The development of the Fast-Fourier-Transform (FFT) algorithm in 1966, reduced the number of arithmetic operations considerably and is used extensively today. Filtering via FFT is accomplished by computing the transform of the input function, multiplying by the filter transfer function, and inverse transforming the result. The recursive algorithm, which has in general an infinite impulse response [3], constitutes another technique for the realization of two-dimensional digital filters.

Hall [6] compares the amount of computation required for the three filtering techniques. He shows that, in general,

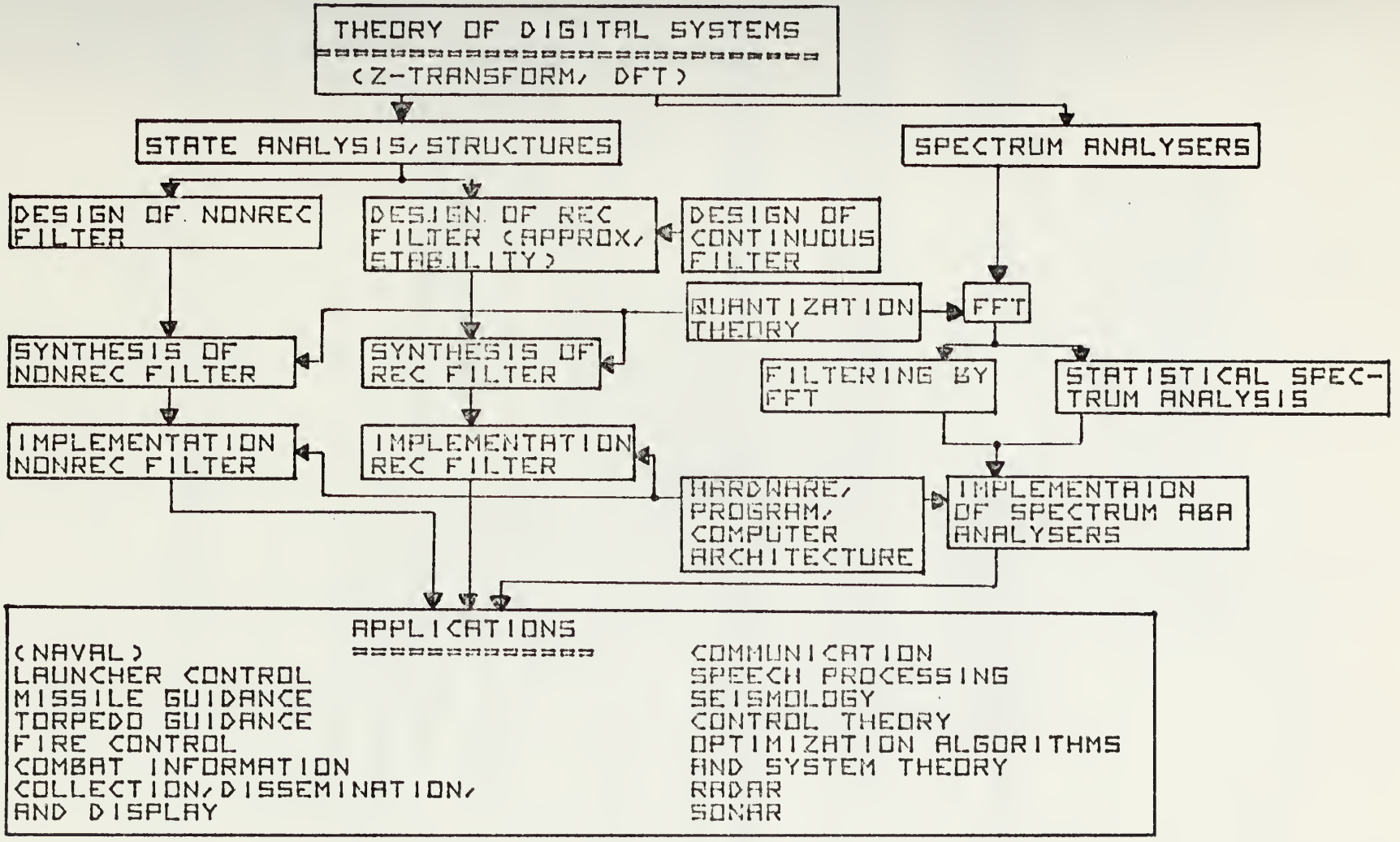

FIG.1.1: OVERVIEW OF ONE-DIMENSIONAL DIGITAL SYSTEMS.

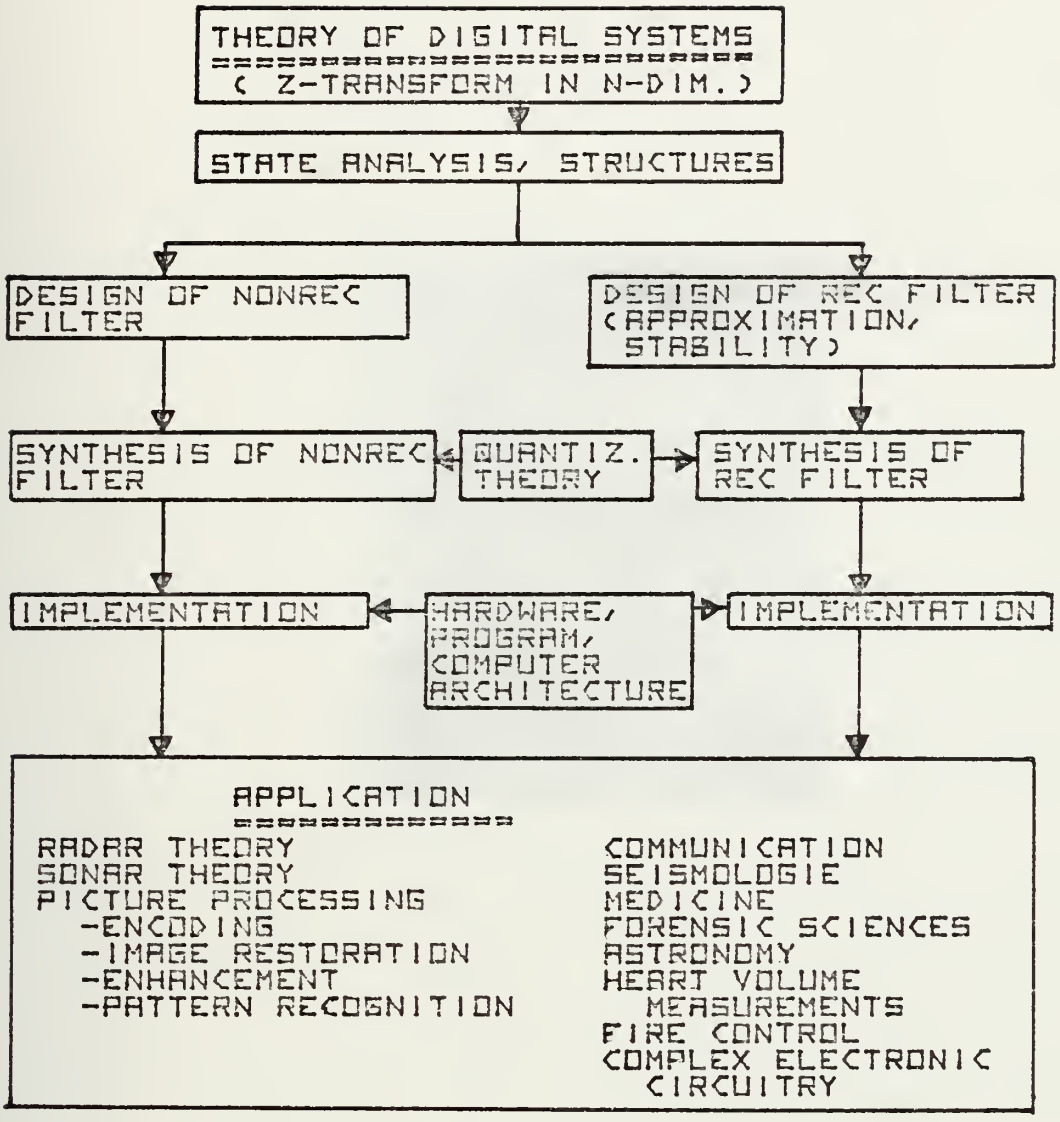

FIG.1.2: OVERVIEW OF N-DIMENSIONAL DIGITAL SYSTEMS.

FIG 1.3a EXAMPLE OF TWO-DIMENSIONAL DIGITAL FILTERING, [2]
(ORIGINAL PHOTOGRAPH)

FIG 1.3b EXAMPLE OF TWO-DIMENSIONAL DIGITAL FILTERING, [2]
(LOW-PASS FILTERED VERSION OF ORIGINAL PHOTOGRAPH)

FIG 1.3c EXAMPLE OF TWO-DIMENSIONAL DIGITAL FILTERING, [2]
(HIGH-PASS FILTERED VERSION OF THE ORIGINAL
PHOTOGRAPH)

the FFT and recursive algorithm are preferable to the non-recursive one in number of computations and storage requirements. Hall demonstrates that the recursive filter algorithm constitutes the best method for large amounts of data, i.e., is the fastest and the cheapest.

When processing two-dimensional data by recursive filters a fundamental problem exists due to the inherent feedback, namely, the problem of numerical stability. Since, in general, two variable polynomials cannot be factored into a product of real first and second order real coefficient polynomials, it is difficult to solve the stability problem for two-dimensional recursive filtering. Consequently, the majority of papers published in two-dimensional digital filtering deal with the design of nonrecursive filters which are inherently stable, i.e., [7] - [11].

There are several reports discussing two-dimensional recursive digital filters [12] - [15]. For example [12] and [15] formulate two-dimensional recursive filters by the Z-transform and linear difference equations, and although they investigate problem areas related to stability and realization, the majority of problems remain to be solved.

The most important applications of two-dimensional digital filtering of digital data are in picture processing and geophysical data analysis. Picture processing can be categorized into:

1. Digital image restoration and enhancement, and
2. Computer pictorial pattern recognition.

The methods of image restoration and enhancement are applied to invert degradations, such as aberrations, atmospheric effects, scanning, motion, and to manipulate images to improve viewing phenomena experienced by the human eye. Image restoration and enhancement has been used with great success in biomedicine [16], i.e., in extraction of quantitative information from X-ray films, chromosome counting, measuring the extent of atherosclerosis from arteriograms, in forensic sciences application, i.e., fingerprint image enhancement for automatic classification, and in astronomy [17], i.e., removal of turbulence from astronomical photography [18]. Pictorial pattern recognition by digital computer has gained great importance in satellite surveillance and military reconaissance. The application of two-dimensional digital filter permit the separation of different horizontal scans on magnetic and gravity maps in geophysics and can be used equally well for structural and topographic maps or for any other type of data which is available in the format of a planar grid [19], [4].

Although digital filtering in several dimensions is gaining importance in medicine, i.e.,heart volume measurements, in fire control problems, and to analyze complex electronic circuitry, there exists no general theory concerning structures, analysis and design.

These considerations are summarized as follows: since one-dimensional recursive digital analysis and design techniques depend strongly on the fundamental theorem of algebra

and on extensive utilization of continuous design theory, it represents a special, i.e., a non-generalizable field in the area of N-dimensional recursive digital filtering. Multi-dimensional digital filtering is well developed in two-dimensions but is based, due to the absence of recursive theory analysis and design tools, predominantly on nonrecursive filtering schemes.

B. AREA OF INVESTIGATION

The design of N-dimensional recursive digital filters is achieved by choosing filter coefficients to approximate given specifications and to evaluate the stability of the resulting filter. Several methods, which are discussed in Chapter II, are available to determine whether a multi-dimensional recursive digital filter is stable. They are based on a numerical root distribution investigation of the N-dimensional characteristic equation of $H(\bar{z})$ and determine whether or not a filter is stable.* There is no qualitative information extracted about how stable or unstable a system is or what coefficient changes of $H(\bar{z})$ are necessary to make an unstable system stable. Moreover, these methods are complicated and result in time-consuming computer programs, which must be applied to each individual filter design variation. Due to these reasons, the design of multi-dimensional, recursive digital filters has <u>not</u> been achieved [2].

In the following chapters, a different approach to analysis and design of N-dimensional recursive filters is presented which is based on the Taylor expansion of the filter

*The notation is discussed in Appendix A.

$H(\bar{z})$. It can be shown that an N-dimensional recursive filter is stable if an only if the sum of all unit sample response entries converge absolutely, i.e.,

$$S = \sum_{\substack{\bar{n} \\ (0 \le n_i \le \infty)}} \sum |h(\bar{n})| < \infty ,$$

where the $h(\bar{n})$ are the coefficients of the Taylor expansion of N-dimensional transfer function $H(\bar{z})$.

Thus, conditions for stability of an N-dimensional recursive system $H(\bar{z})$ can be obtained by observing the absolute convergency behavior of its Taylor expansion coefficients. Although this represents a rather complicated method to find stability conditions, it can be used to identify important unit sample response characteristics of certain two-dimensional recursive filters, which in turn can be generalized to N-dimensions.

The relationship of the N-dimensional recursive filter coefficients to the unit sample response coefficients is investigated and methods to perform the approximation step of time-domain design are studied. Also, structural realization of N-dimensional transfer functions are searched. In summary a new design and implementation technique for N-dimensional recursive filters is developed.

C. PREVIEW OF RESULTS

The results can be grouped into techniques for stability analysis of N-dimensional recursive filters (Chapters V to

VII), three techniques to solve the approximation part of N-dimensional recursive filter design (Chapters VIII and IX) and, combining both previous results, design techniques are derived (Chapter X). In addition, the implementation of N-dimensional recursive filters is considered and some new forms presented. These results are obtained using a compact vector index notation and a general theory defining characteristics of N-dimensional systems, as well as the N-dimensional Z-transform and some of its properties (see Appendix A).

The computations of N-dimensional Taylor expansion coefficients $h(\bar{n})$ are discussed in Chapter IV. The standard derivative operator method requires complicated computations, and the convolutional or recursive technique requires the knowledge of all previous values to compute $h(\bar{n})$. Methods of combinatorial algebra are applied to derive two efficient nonrecursive formulas for Taylor expansion coefficients, of which one has high speed characteristics, i.e., requires very few multiplications and additions. The results of Chapter IV are used in Chapter V to solve the stability problem of the second-order (coupled), third- and fourth-order (uncoupled) two-dimensional recursive digital filter using Ultraspherical and derivative operator theory.

In Chapters VI and VII, observations made in two-dimensional stability analysis of the previous chapter are generalized to cases of any order in two-and also in

N-dimensions, resulting in new sets of sufficient and necessary stability conditions. A general method to derive necessary and sufficient stability conditions for N-dimensional recursive digital filters is presented and new stability conditions for the first degree and positive coefficient case in N-dimensions are listed.

The important advantage of the new approach to the stability problem over the previously outlined numerical ones becomes evident if one considers that for a given type of filter transfer function the methods of Chapters V to VII are applied only once to obtain stability conditions in terms of coefficients of the characteristic equation of $H(\bar{z})$. These conditions can be used by the design engineer in a simple manner to test whether a specific filter is stable. They allow the identification of coefficients causing instability and can easily be interpreted to what extent coefficients must be changed to stabilize an unstable system.

The nonrecursive combinatorial formula of Chapter IV is used in Chapter VIII to formulate rules for the propagation of the characteristic equation coefficients in $H(\bar{z})$ in the corresponding unit sample response. Conversely, computer algorithms for the extraction of an exact all-pole or rational filter transfer function or a parallel arrangement of low-order all-pole or rational filter from a given unit sample response are presented in Chapter IX. All of these methods are new. The extraction of a parallel arrangement

of low-order sections can be viewed as an approximate method for partial fraction expansion in N-variables.

In Chapter X, a time-domain design technique is presented using an extraction technique to approximate a given specification by a transfer function. The stability of the extracted transfer function is analyzed using the methods presented in Chapters V to VII. A measure of quality for the N-dimensional approximation techniques is introduced which compares the spectra of the given unit sample response with the spectra of the extracted transfer function. Finally, the implications of the N-variable partial fraction expansion technique on frequency domain design are discussed and areas of future research are outlined.

In summary a series method to analyze N-dimensional recursive digital filters is presented and new results regarding the stability of N-dimensional recursive digital filters are achieved. The series approach is used to formulate three new transfer function extraction techniques which, combined with the stability and structural analysis, present a new time-domain design technique for N-dimensional recursive filters.

II. METHODS TO DETERMINE STABILITY OF MULTI-DIMENSIONAL SYSTEMS

A. INTRODUCTION

Steiglitz [21] has demonstrated by the construction of a specific isomorphism between the Hilbert Space of a complex valued Lebesque measurable function f(t) and the Hilbert Space of double-ended sequences of complex numbers $\{f(n)\}_{n=-\infty}^{\infty}$, that the theories of one-diemnsional signal processing with linear time-invariant realizable filters are identical in the continuous and discrete case. It is interesting to note that optimization problems involving quadratic cost functions are also equivalent in the continuous and discrete time domains.

The extension of this theory to several dimensions, though mathematically feasible, has little importance since a powerful continuous filter theory exists only in one dimension.

Another important property of one-dimensional theory is deduced directly from the fundamental theorem of algebra which states that every higher-order polynomial can be factored into a product of lower-order polynomials. The importance of the one-variable factorization property cannot be minimized. It permits the designer to investigate stability of a higher-order system by determining the factored form representation and applying simple stability criteria to each factor. If each and every factor is stable, then the

higher-order system is stable [1], [22]. The factorization property also constitutes a method of realization of higher-order filters by paralleling, or cascading lower order sections, thereby reducing coefficient sensititity problems inherent in realizing higher order systems. Finally, an unstable one-variable filter can be stabilized by cascading an appropriate all-pass filter [2]. This does not work in the analog domain because exact pole-zero cancellation is impossible. This technique would seem to be feasible in the discrete time domain except that roundoff effects may cause difficulties. It is shown in Appendix B that multivariable polynomials cannot be factored in general. The above are some of the major difficulties opposing the generalization of one-dimensional system theory to multi-dimensions. Some important conceptual ideas of one-dimensional analysis that can be generalized to several dimensions are presented in Appendix A. These include the definition of N-dimensional linear, shift-invariant, realizable, and separable systems, the N-dimensional Z-Transform and its properties, as well as the notion of the N-dimensional recursive equations and transfer function.

The following paragraphs deal with existing methods to determine stability of N-dimensional recursive systems, $H(\bar{z})$ (notation defined in Appendix A) which are obtained by applying the N-dimensional Z-Transform to a linear, shift-invariant, causal N-dimensional difference equation.

B. METHODS TO DETERMINE STABILITY OF MULTI-VARIABLE SYSTEMS

Shanks, Treital and Justice recently pulished a technique to determine the stability of a two-dimensional recursive system, $H(z_1,z_2)$, by which the unit disk in the z_1-plane must be mapped into the z_2-plane by solving the implicit two-variable denominator polynomial of $H(z_1,z_2)$. A necessary and sufficient condition for stability is determined if the image of the z_1-plane unit disk in the z_2-plane does not overlap the unit disk in the z_2-plane [12]. This method requires an infinite number of mappings and cannot, therefore, be applied exactly. Huang [13] simplified the stability problem by the observation that

$$H(z_1,z_2) = \frac{A(z_1,z_2)}{B(z_1,z_2)} ,$$

where A and B are two-variable polynomials, is stable if and only if,

1. The map of $\delta d_1 \equiv \{z_1:|z_1|=1\}$ in the z_2-plane according to the equation $B(z_1,z_2) = 0$ lies inside $d_2 = \{z_2:|z_2|\geq 1\}$.

2. No point in $d_1 = \{z_1:|z_1| \geq 1\}$ maps into the point $z_2 = 0$ by the relation $B(z_1,z_2) = 0$.

Although this procedure is finite, it requires the application of two bilinear transformations to formulate the problem as discussed by Ansell [23] whose main contribution is to couple the use of a Hermite test for checking stability with a series of Sturm tests checking positivity. Anderson and Jury [24] modified Huang's method by outlining a procedure which replaces the bilinear transformations by the

construction of a Schur-Cohn matrix and the checking for positivity of a set of self-inversive polynomials. It also replaces the Hermite test [25] by a Schur-Cohn matrix test and requires a series of Sturm tests or equivalently, a system of tests establishing the root distribution of a polynomial. These modifications represent a substantial reduction in computations as compared to Huang's method.

Siljak [26] comments on [24] by proposing a substantial simplification of the number of Sturm tests which he states is desirable because a computer processing of the Sturm test is not available. However, a suitable computer algorithm for the Sturm test has recently been published by Singh and Panwar, [27]. The determination of stability of multivariable filters is solved by Bose and Kamat [28] using a method outlined in [29] where the N-variable characteristic equation of $H(\bar{z})$ is reduced to several single-variable polynomials by an algorithm composed of a finite number of rational operations, followed by repeated factorization of the set of one-variable polynomials and back substitutions. This procedure is very complicated and the implementation on a general purpose digital computer may not be feasible [28], as recognized by the authors themselves. A slightly simpler method for determining the stability of two-dimensional filters has been offered very recently by Siljak [30] in an algorithmic approach requiring the equivalence of two Marden tests [29] and checking positive definiteness with methods

developed in [31], [32], and [33]. This last approach has been implemented by Schaldach [34] on a general purpose computer. Finally, Jury [36] presented an excellent summary on methods to determine stability of multivariable filter using the inners approach.

C. SUMMARY

The above outlined methods to determine the stability of multivariable characteristic equation of $H(\bar{z})$ to identify roots not satisfying

$$\bigcap_{i=1}^{n} |z_i| < 1 \qquad (2.1)$$

where $\bigcap_{i=1}^{n} |z_i| < 1 \equiv \left(|z_1| < 1\right) \cap \left(|z_2| < 1\right) \cap \ldots \cap \left(|z_n| < 1\right)$.

They also have in common the property that they are highly theoretical and very difficult to apply [2] and of limited practical value to the design engineer. It is necessary for analysis and design purposes of multivariable systems to identify not only whether or not a system is stable, i.e., that all roots of the N-variable characteristic equation satisfy eq (2.1), but also what coefficients of an unstable transfer function cause the instability and how the coefficients must be changed to achieve stability. This latter question can only be solved definitely utilizing previously considered methods for the bilinear two-dimensional case, for example:

$$H(z_1,z_2) = \frac{1}{1 - \alpha_{10} z_1^{-1} - \alpha_{01} z_2^{-1} - \alpha_{11} z_1^{-1} z_2^{-1}} \tag{2.2}$$

for which stability conditions are derived in [12], [13], and [24]. This result will be discussed further in Chapters V and VII.

III. STRUCTURES AND STATE SPACE FORMULATION FOR N-DIMENSIONAL DIGITAL FILTER

A. INTRODUCTION

There are several ways of realizing a given digital filter transfer function. The choice of structure depends on finite wordlength effects in practical hardware realizations on complexity of computation.

One-dimensional canonical structures are most economical and fastest, yet they may have undesirable finite register length effects. In this chapter a one-dimensional direct form filter realization is introduced designated by direct form 4 to distinguish it from other direct forms which corresponds directly to hardware implementation and by realizing the numerator and denominator polynomial separately in cascaded form. The direct form 4 is deductively used to derive direct form and canonical structures in N-dimensions, which have considerable importance, since the nonfactorability characteristic of multivariable polynomials eliminates the possibility of realizing high-order multi-dimensional filter by paralleling or cascading low-order standardized sections, except for the separable case.

The state space approach provides a means for characterizing complex systems in a simple manner. The complexity of manipulation is decreased and the easy implementation on a general purpose digital computer minimizes computational

difficulties. The increase of the number of state variables, the number of inputs, or the number of outputs does not increase the complexity of the equations. In fact, the analysis of complicated multiple-input-multiple-output systems can be carried out by procedures that are only slightly more complicated than those required for the analysis of systems of first-order equations.

The one-dimensional state variable approach to digital filtering was presented by Grindon [37] in 1970. Since then it is commonly used in one-dimensional digital filter analysis. For example, Parker and Hess [38] used the state space approach to derive twenty four second-order canonic digital filter sections.

Parker, Girard and Souchon [42] used state space methods to express the co-variance matrix of state errors and the variance of the output error in terms of the correlation matrices of the quantization error sources. This method allowed the evaluation of correlation effects between error sources in the comparison of different filter structures.

Parker and Yakowitz [44] used the state space approach to compute quantization error bounds.

It can be summarized that the state space approach is a powerful and commonly used method to analyze one-dimensional digital systems. Since the following chapters are mainly concerned with N-dimensional filter theory, an extension of the one-dimensional state space analysis to N-dimensions is developed in Section C of this chapter.

B. STRUCTURES OF N-DIMENSIONAL DIGITAL FILTER

1. One-Dimensional Digital Filter Realization

The rational transfer function (A.10) has for the one-dimensional case, i.e., N = 1, the form:

$$H(z_1) = \frac{\sum_{\ell=0}^{L} \beta_\ell \, z_1^{-\ell}}{1 - \sum_{m=1}^{M} \alpha_m \, z_1^{-m}} = \frac{Y(z_1)}{X(z_1)} \qquad (3.1)$$

The time domain representation is obtained by applying the inverse Z-Transform to eq (3.1) which results in:

$$y(n_1) = \sum_{m=1}^{M} \alpha_m \, y(n_1-m) + \sum_{\ell=0}^{L} \beta_\ell \, x(n_1-\ell) \qquad (3.2)$$

The realization implementing eq (3.2) directly, is known as direct form 1 and is shown in Figure 3.1.

Equation (3.1) can be rewritten in a slightly different form by introducing a new variable, $W(z_1)$, such that

$$H(z_1) = \frac{W(z_1)}{X(z_1)} \cdot \frac{Y(z_1)}{W(z_1)} \qquad (3.3)$$

The corresponding set of difference equations consists of:

$$w(n_1) = x(n_1) + \sum_{m=1}^{M} \alpha_m \, w(n_1-m) \qquad (3.4)$$

and

$$y(n_1) = \sum_{\ell=0}^{L} \beta_\ell \, w(n_1-\ell) \qquad (3.5)$$

Equations (3.4) and (3.5) are realized in the direct form 2 as shown in Figure 3.2 which can be visualized as a cascade realization of two digital filters, realizing the denominator and numerator polynomials, respectively. Figure 3.2 can be redrawn as shown in Figure 3.3. The resulting realization is called direct form 3 or canonic form, since it represents a structure with the number of delays equal to the order.

At this point, an additional realization will be introduced, the direct form 4, which combines the characteristics of the direct forms 1 and 2 by having only two entries in each summer, which corresponds directly to hardware implementation and by realizing the numerator and denominator polynomial separately in cascaded form. The usefulness of the direct form 4, which is shown in Figure 3.4 and which replaces the direct forms 1 and 2, will become evident in the following section.

There are several other methods to realize a one-dimensional M^{th} order digital filter. For example, the cascade form of first and second order sections $H(z_1)$, as shown in

Figure 3.6, where

$$H(z_1) = a_0 \prod_{i=1}^{k} Hi\ (z_1) \quad , \quad k = \left[\frac{M+1}{2}\right] \qquad (3.6)$$

and $[x] \equiv$ largest integr $\leq x$

Each component $H_i(z_1)$ can be realized in one of the above outlined forms.

Partial fraction expansion methods applied to eq (3.1) lead to a parallel from realization of first and second order sections (see Fig 3.5) i.e.,

$$H(z_1) = C + \sum_{i=1}^{k} Hi\ (z_1) \quad , \quad k = \left[\frac{M+1}{2}\right] \qquad (3.7)$$

Other forms of realization include hybrid structures, i.e., parallel-cascade forms, transpose configurations, which can be obtained for all previously outlined structures by reversing the direction of signal flow and by interchanging all branch and summing modes, wave-digital filter [46] to [50] and continued fraction expansion filter [51].

The direct forms discussed above and the series/parallel arrangement of lower order sections are by far the most often used ones in computer simulation and in digital hardware.

2. Deductive Approach to Develop N-Dimensional Structures

The fundamental theorem of algebra does not extend to the multi-variable case which is proven in Appendix B. Consequently, the series and parallel realization schemes cannot be generalized to N-dimensions. The following

paragraphs develop a generalization for direct forms to two-dimension and then to N-dimensions.

The numerator of the two-dimensional transfer function

$$H(z_1, z_2) = \frac{\sum_{\ell_1=0}^{L_1} \sum_{\ell_2=0}^{L_2} \beta_{\ell_1 \ell_2} z_1^{-\ell_1} z_2^{-\ell_2}}{1 - \sum_{\substack{m_1=0 \\ (m_1+m_2 \neq 0)}}^{M_1} \sum_{m_2=0}^{M_2} \alpha_{m_1 m_2} z_1^{-m_1} z_2^{-m_2}} \qquad (3.8)$$

can be rewritten as one-variable polynomial in z_2, weighted by coefficients which are functions in z_1, i.e.,

$$N(z_1, z_2) = \sum_{\ell_2=0}^{L_2} \left(\sum_{\ell_1=0}^{L_1} \beta_{\ell_1 \ell_2} z_1^{-\ell_1} \right) z_2^{-\ell_2} \qquad (3.9)$$

$$= \sum_{\ell_2=0}^{L_2} \left(N_{L_1 \ell_2}(z_1) \right) z_2^{-\ell_2} \qquad (3.10)$$

The same reasoning applied to the denominator polynomial leads to

$$D(z_1, z_2) = 1 - \sum_{m_2=0}^{M_2} \left(\sum_{m_1=0}^{M_1} \alpha_{m_1 m_2} z_1^{-m_1} \right) z_2^{-m_2} \qquad (3.11)$$

$$= 1 - \sum_{m_2=0}^{M_2} \left(D_{M_1 m_2}(z_1) \right) z_2^{-m_2} \qquad (3.12)$$

where the sum of the indices is $m_1 + m_2 \neq 0$. To obtain the direct form 3 representation, a new function, $W(z_1,z_2)$, is introduced:

$$H(z_1,z_2) = \frac{W(z_1,z_2)}{X(z_1,z_2)} \cdot \frac{Y(z_1,z_2)}{W(z_1,z_2)} \qquad (3.13)$$

where each factor can be written using eq (3.10) as

$$W(z_1,z_2) = \sum_{\ell_2=0}^{L_2} \left(N_{L_1 \ell_2}(z_1) \right) z_2^{-\ell_2} \; X(z_1,z_2) \qquad (3.14)$$

and eq (3.12) as

$$Y(z_1,z_2) = W(z_1,z_2) + \sum_{m_2=0}^{M_2} \left(D_{M_1 m_2}(z_1) \right) z_2^{-m_2} \, Y(z_1,z_2) \qquad (3.15)$$

The realization of eqs (3.14) and (3.15) is shown in Figure 3.7 using compact notation, and in Figure 3.8 where $N_{L_1 \ell_2}(z_1)$ and $D_{M_1 m_2}(z_1)$ are implemented for each $(L_1 \ell_2)$ and and $(M_1 m_2)$ by one-dimensional direct form 4 realizations. The direct form 3 (canonic) will be derived in the next section. The direct form 4 realization of $H(z_1,z_2)$ is shown in Figures 3.10 and 3.11, using compact notation and one-dimensional direct form 4 implementation of each $N_{L_1 \ell_2}$

and $D_{M_1 m_2}$, respectively. The generalization to N-dimensions follows directly where the N-dimensional transfer function is written in the numerator and denominator as a one-variable summation which is weighted by functions of (N-1) variables, i.e.,

$$H(z_1,\ldots,z_N) = \frac{\sum_{\ell_N=0}^{L_N} \left(N_{L_1 \cdots L_{N-1} \ell_N}(z_1,\ldots,z_{N-1}) \right) z_N^{-\ell_N}}{1 - \sum_{m_N=0}^{M_N} \left(D_{M_1 \cdots M_{N-1} m_N}(z_1,\ldots,z_{N-1}) \right) z_N^{-m_N}} \qquad (3.16)$$

The direct forms 3 and 4 in N-dimensions are shown using compact notation in Figures 3.12 and 3.13, respectively.

Example 3.1:

The direct form 4 realization of a full quadratic transfer function in three-dimensions is shown in Figure 3.15. Structures of two-dimensional third-order and fourth-order uncoupled, as well as second-order and fourth-order coupled filters, which will be investigated in detail in the next chapters, are presented in Appendix G.

A separable system is defined in Appendix A(4) by

$$h(\bar{n}) = \prod_{i=1}^{N} h_i(n_i) \qquad (3.17)$$

which is shown in Appendix A(5) to imply:

$$H(\bar{z}) = \prod_{i=1}^{N} H_i(z_i) \qquad (3.18)$$

But $H(\bar{z})$ can be realized by a cascade structure of one-dimensional transfer functions in each dimension, as shown in Figure 3.16, by techniques discussed in Paragraph 1 of this section.

C. STATE EQUATION FORMULATION

1. State equation formulation in two-dimensions

The two-dimensional transfer function $H(z_1,z_2)$ can be written in long hand notation as

$$H(z_1,z_2) = \frac{\sum_{\ell_1=0}^{L_1} \sum_{\ell_2=0}^{L_2} \beta_{\ell_1 \ell_2} z_1^{-\ell_1} z_2^{-\ell_2}}{1 - \sum_{m_1=0}^{M_1} \sum_{\substack{m_2=0 \\ (m_1+m_2 \neq 0)}}^{M_2} \alpha_{m_1 m_2} z_1^{-m_1} z_2^{-m_2}} \qquad (3.19)$$

If the function $W(z_1,z_2)$ is introduced similarly, as in the previous section, then

$$H(z_1,z_2) = \frac{W(z_1,z_2)}{U(z_1,z_2)} \cdot \frac{Y(z_1,z_2)}{W(z_1,z_2)}$$

Each factor can be written as:

$$Y(z_1,z_2) = \sum_{\ell_1=0}^{L_1} \sum_{\ell_2=0}^{L_2} \beta_{\ell_1\ell_2} z_1^{-\ell_1} z_2^{-\ell_2} W(z_1,z_2) \qquad (3.20)$$

and

$$W(z_1,z_2) = U(z_1,z_2) + \sum_{m_1=0}^{M_1} \sum_{\substack{m_2=0 \\ (m_1+m_2\neq 0)}}^{M_2} \alpha_{m_1m_2} z_1^{-m_1} z_2^{-m_2} W(z_1,z_2) \qquad (3.21)$$

The inverse Z-transforms of eqs (3.20) and (3.21) are

$$y(n_1,n_2) = \sum_{\ell_1=0}^{L_1} \sum_{\ell_2=0}^{L_2} \beta_{\ell_1\ell_2} w(n_1-\ell_1, n_2-\ell_2) \qquad (3.22)$$

and

$$w(n_1,n_2) = u(n_1,n_2) + \sum_{m_1=0}^{M_1} \sum_{\substack{m_2=0 \\ (m_1+m_2\neq 0)}}^{M_2} \alpha_{m_1m_2} w(n_1-m_2, n_1-m_2) \qquad (2.23)$$

Without loss of generality, L_i is chosen equal to M_i for all i. The structure realizing eqs (3.22) and (3.23) is shown in Figure 3.9. It is noted that the number of delays in Figure 3.9 equals the order of $H(z_1,z_2)$. The structure is, therefore, by definition, canonic.

Definition 3:

The state $X_{pq}(n_1,n_2)$ is defined to be a number which enters at the time instant (n_1,n_2) the $(p+1)^{st}$, $(q+1)^{st}$ delay in z_1^{-1}, z_2^{-1} direction, respectively. Following definition 3 the states are marked in Figure 3.16. Comparing eqs (3.22) and (3.23) with the structure in Figure 3.16 easily identifies the following equalities:

$$X_{00}(n_1,n_2) = w(n_1,n_2)$$

$$X_{10}(n_1,n_2) = w(n_1-1, n_2)$$

$$\vdots$$

$$X_{M_1 0}(n_1,n_2) = w(n_1-M_1, n_2)$$

$$X_{01}(n_1,n_2) = w(n_1,n_2-1)$$

$$X_{11}(n_1,n_2) = w(n_1-1,n_2-1)$$

$$\vdots$$

$$X_{M_1 1}(n_1,n_2) = w(n_1-M_1,n_2-1)$$

$$\vdots$$

$$X_{0M_2}(n_1,n_2) = w(n_1,n_2-M_2)$$

$$X_{1M_2}(n_1, n_2) = w(n_1-1,n_2-M_2)$$

$$\vdots$$

$$X_{M_1M_2}(n_1,n_2) = w(n_1-M_1,n_2-M_2)$$

From Figure 3.16 the relationship between the state variables is identified as:

$$X_{00}(n_1,n_2) = \alpha_{10}\, X_{00}(n_1-1,n_2) + \alpha_{20}\, X_{10}(n_1-1,n_2) + \ldots$$

$$+ \alpha_{30}\, X_{00}(n_1-1,n_2) + \alpha_{01}\, X_{00}(n_1,n_2-1) + \ldots$$

$$+ \alpha_{11}\, X_{01}(n_1-1,n_2) + \alpha_{21}\, X_{11}(n_1-1,n_2) + \ldots$$

$$\vdots$$

$$+ \alpha_{0M_2}\, X_{0(M_2-1)}(n_1,n_2-1) + \alpha_{1M}\, X_{0M}(n_1-1,n_2) + \ldots$$

$$+ \alpha_{2M_2}\, X_{1M_2}(n_1-1,n_2) + \ldots$$

$$X_{10}(n_1,n_2) = X_{00}(n_1-1,n_2)$$

$$\vdots$$

$$X_{01}(n_1,n_2) = X_{00}(n_1,n_2-1)$$

$$X_{11}(n_1,n_2) = X_{01}(n_1-1,n_2)$$

$$\vdots$$

$$X_{0M_2}(n_1,n_2) = X_{0(M_2-1)}(n_1,n_2-1)$$

$$X_{1M}(n_1,n_2) = X_{0M_2}(n_1-1,n_2)$$

$$\vdots$$

These equations are written in matrix form as follows:

$$\underline{X}(n_1,n_2) = \underline{\bar{A}}_1\, \underline{X}(n_1-1,n_2) + \underline{\bar{A}}_2\, \underline{X}(n_1,n_2-1) + \underline{B}\, u(n_1,n_2) \qquad (3.24)$$

where

$$\underline{X}(n_1,n_2) = \left[X_{00}\ X_{10}\ X_{20} \cdots X_{(M_1-1)0}\ X_{01}\ X_{11}\ X_{21} \cdots \right.$$

$$\left. X_{(M_1-1)1} \cdots X_{0M_2}\ X_{1M_2}\ X_{(M_2-1)M_2} \right]^t$$

$$\underline{A}_1 = \begin{bmatrix} \bar{A}_0 & 0 & \bar{A}_1 & 0 \cdots 0 & \bar{A}_{M2} \\ \underline{R} & 0 & \underline{0} & 0 \cdots 0 & \underline{0} \\ \underline{0} & 0 & \underline{0} & 0 \cdots 0 & \underline{0} \\ \underline{0} & 0 & \underline{R} & 0 \cdots 0 & \underline{0} \\ \vdots & \vdots & \vdots & \vdots & \vdots \\ \underline{0} & 0 & \underline{0} & 0 \cdots 0 & \underline{0} \\ \underline{0} & 0 & \underline{0} & 0 \quad 0 & \underline{R} \end{bmatrix}$$

where

$$\bar{A}_j \equiv \left[\alpha_{1j}\ \alpha_{2j}\ \alpha_{3j} \cdots \alpha_{M_1 j} \right] ,$$

$$\underline{R} \equiv \begin{bmatrix} 1 & 0 & 0 & \cdots & 00 \\ 0 & 1 & 0 & \cdots & 00 \\ 0 & 0 & 1 & \cdots & 00 \\ \cdot & \cdot & \cdot & \cdots & \cdot \\ \cdot & \cdot & \cdot & \cdots & \cdot \\ \cdot & \cdot & \cdot & \cdots & \cdot \\ 0 & 0 & 0 & \cdots & 10 \end{bmatrix} , \text{ which is } (M_1-1) \text{ X } M_1$$

and $\underline{0}$ is the zero matrix.

$$A_2 = \begin{bmatrix} \underline{\bar{Q}}(\alpha_{01}) & \underline{\bar{Q}}(\alpha_{02}) & \cdots & \underline{\bar{Q}}(0) \\ \underline{\bar{Q}}(1) & \underline{\bar{Q}}(0) & & \underline{\bar{Q}}(0) \\ \vdots & \vdots & \ddots & \vdots \\ \underline{\bar{Q}}(0) & \underline{\bar{Q}}(0) & \cdots & \underline{\bar{Q}}(0) \end{bmatrix}$$

where

$$\underline{\bar{Q}}(p) \equiv \begin{bmatrix} p & 0 & 0 & \cdots & 0 \\ 0 & 0 & 0 & \cdots & 0 \\ 0 & 0 & 0 & \cdots & 0 \\ \vdots & \vdots & \vdots & \cdots & \vdots \\ 0 & 0 & 0 & \cdots & 0 \end{bmatrix}$$

which is $M_1 \times M_1$

$$\underline{B} = [1\ 00\ldots0\ 000\ldots0\ \ldots000\ \ldots\ 0]^t$$

The output equation is similarly formulated in matrix form:

$$y(n_1,n_2) = \underline{C}_1\, \underline{X}(n_1-1,n_2) + \underline{C}_2\, \underline{X}(n_1,n_2-1) + Du(n_1,n_2) \quad (3.25)$$

where $\underline{X}$ is defined as before, and

$$\underline{C}_1^t = \begin{bmatrix} \beta_{10} + \alpha_{10} & \beta_{00} \\ \beta_{20} + \alpha_{20} & \beta_{00} \\ \beta_{30} + \alpha_{30} & \beta_{00} \\ \vdots & \\ \beta_{11} + \alpha_{11} & \beta_{00} \\ \beta_{21} + \alpha_{21} & \beta_{00} \\ \beta_{31} + \alpha_{31} & \beta_{00} \\ \vdots & \\ \beta_{1(M_2-1)} + \alpha_{1(M_2-1)} & \beta_{00} \\ \beta_{2(M_2-1)} + \alpha_{2(M_2-1)} & \beta_{00} \\ \beta_{3(M_2-1)} + \alpha_{3(M_2-1)} & \beta_{00} \\ \vdots & \\ \beta_{1M_2} + \alpha_{1M_2} & \beta_{00} \\ \beta_{1M_2} \quad \alpha_{1M_2} & \beta_{00} \\ \beta_{1M_2} \quad \alpha_{1M_2} & \beta_{00} \\ \vdots & \end{bmatrix} \qquad \underline{C}_2^t = \begin{bmatrix} \beta_{01} + \alpha_{01} & \beta_{00} \\ 0 & \\ 0 & \\ \vdots & \\ \beta_{02} + \alpha_{02} & \beta_{00} \\ 0 & \\ 0 & \\ \vdots & \\ \beta_{0M_2} + \alpha_{0M_2} & \beta_{00} \\ 0 & \\ 0 & \\ \vdots & \\ 0 & \\ 0 & \\ 0 & \\ \vdots & \end{bmatrix}$$

and $D = \beta_{00}$

2. State equation in N-dimensions

The procedure for obtaining state equations in two dimensions can quite readily be extended to N-dimensions,

i.e., the equations for $y(\bar{n})$ and $w(\bar{n})$ are

$$y(\bar{n}) = \sum_{\substack{\bar{\ell} \\ (0 \le \ell_i \le L_i)}} \beta_{\bar{\ell}}\, w(\bar{n}-\bar{\ell}) \qquad (3.26)$$

and

$$w(\bar{n}) = \mu(\bar{n}) + \sum_{\substack{\bar{m} \\ \left(\begin{smallmatrix} 0 & m_i & M_i \\ \Sigma m_i \neq 0 \end{smallmatrix}\right)}} \alpha_{\bar{m}}\, w(\bar{n}-\bar{m}) \qquad (3.27)$$

The state and output equations

$$\underline{X}(n_1,\ldots,n_N) = \underline{\bar{A}}_1\, \underline{X}(n_1-1,n_2,\ldots,n_N) + \underline{\bar{A}}_2\, \underline{X}(n_1,n_2-1,n_3\ldots,n_N) + \ldots + \underline{\bar{A}}_n\, \underline{X}(n_1,\ldots,n_N-1) + Bu(n_1,\ldots,n_N) \qquad (3.28)$$

$$y(n_1,\ldots,n_N) = \underline{C}_1\, \underline{X}(n_1-1,n_2,\ldots,n_N) + C_2\, \underline{X}(n_1,n_2-1,n_3,\ldots,n_N) + \ldots + \underline{C}_N\, X(n_1,\ldots,n_N-1,N_N-1) + Du(n_1,\ldots,n_N) \qquad (3.29)$$

D. DISCUSSION OF CANONIC SECTIONS IN N-DIMENSIONS

It was stated in Section B of this chapter that a one-dimensional high-order transfer function can be implemented in general as a parallel, cascade or hybrid arrangement of second-order sections. For reasons of noise generation, coefficient sensitivity, economics, logistics and others, these low-order sections are very important. The canonic realizations, for example in Fig 3.3, which constitute

the subclass of second-order systems having minimum number of components, are widely used today [2], [40], and [41].

The non-factorability of multi-variable polynomials and the fact that no stability conditions except for the two-dimensional bilinear case (eq (2.2)) were available up to now explains why recursive digital filter design has not been achieved in two- or higher-dimensions.

In Chapter X, N-dimensional time domain design techniques are presented which result in high-order N-dimensional transfer functions or a parallel arrangement of low-order sections. The order of these parallel sections depends on stability and design considerations. It was shown that factorization or partial fraction expansion cannot in general be achieved. However, approximations (See Chapter IX) are possible, so that the consideration of canonic sections is of value. In Appendix F, a state space approach is proposed to derive multi-dimensional canonic structures for the general second-order two-dimensional case. The derivations of canonical sections in general are not further pursued, but are called to the attention of future researchers in the multi-dimensional digital filter area.

E. SUMMARY

In this chapter an N-dimensional structure for the implementation of digital filters was presented. The direct form 4, which combines features of the direct forms 1 and 2, was used to develop compact realization of N-dimensional filter.

The significance of these N-dimensional realization schemes stems from the fact that realization schemes can be used directly to implement hardware, where components of the realization are replaced by summers, multipliers, and shift registers.

$$H(Z_1) = \frac{\sum_{l=0}^{L} \beta_l Z_1^{-l}}{1 - \sum_{m=1}^{M} \alpha_m Z_1^{-m}}$$

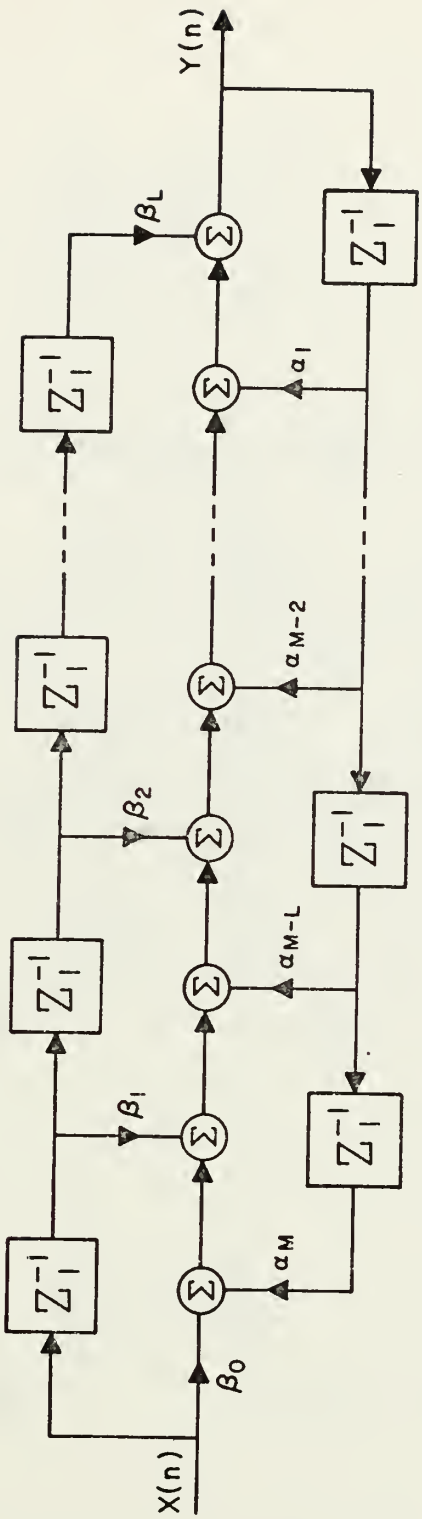

FIG. 3.1 : DIRECT FORM I

$$H(Z_1) = \frac{\sum_{\ell=0}^{L} \beta_\ell \, Z_1^{-\ell}}{1 - \sum_{m=1}^{M} \alpha_m \, Z_1^{-m}}$$

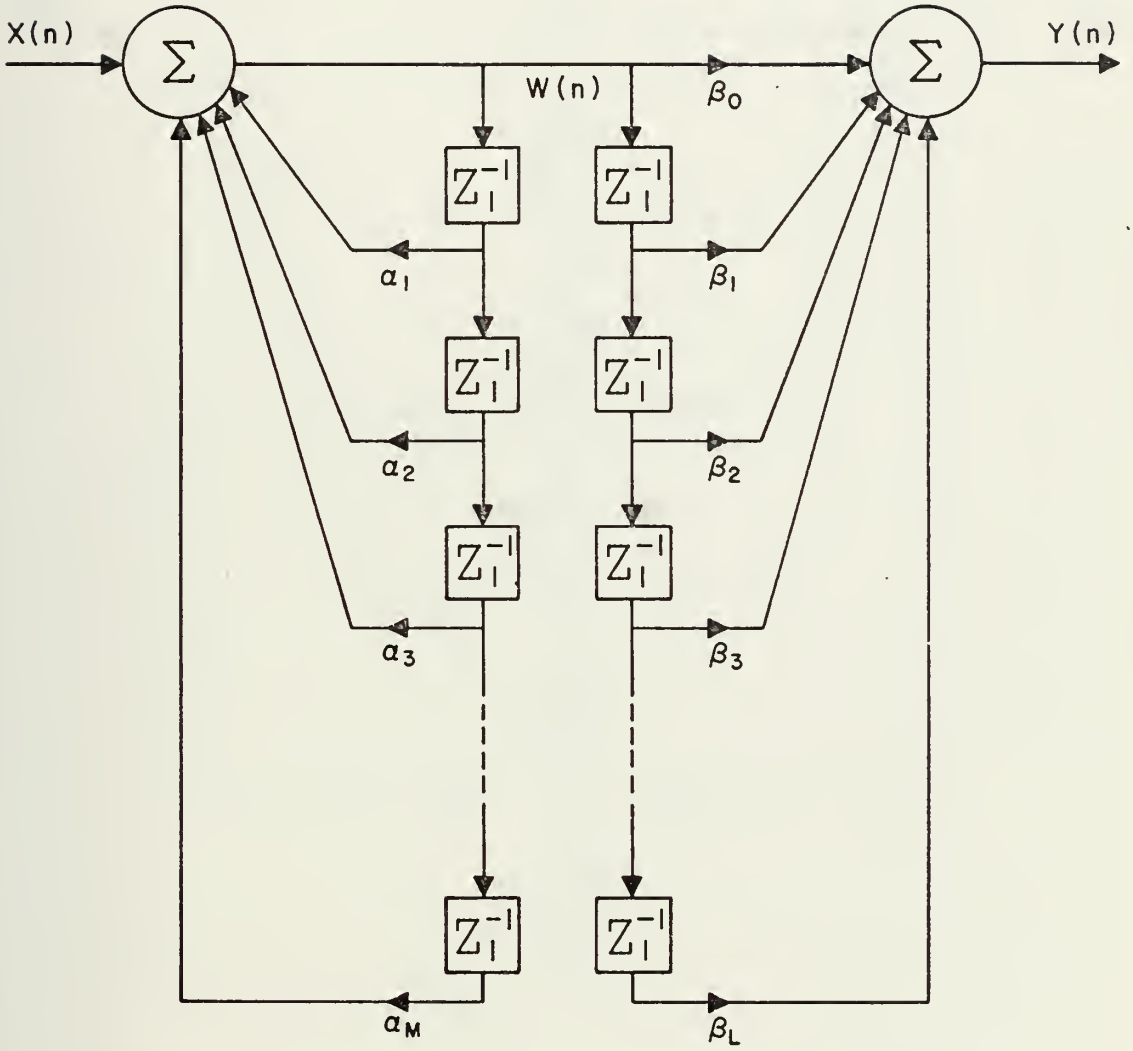

FIG. 3.2: DIRECT FORM 2

$$H(Z_1) = \frac{\sum_{\ell=0}^{L} \beta_\ell \, Z_1^{-\ell}}{1 - \sum_{m=1}^{M} \alpha_m \, Z_1^{-m}}$$

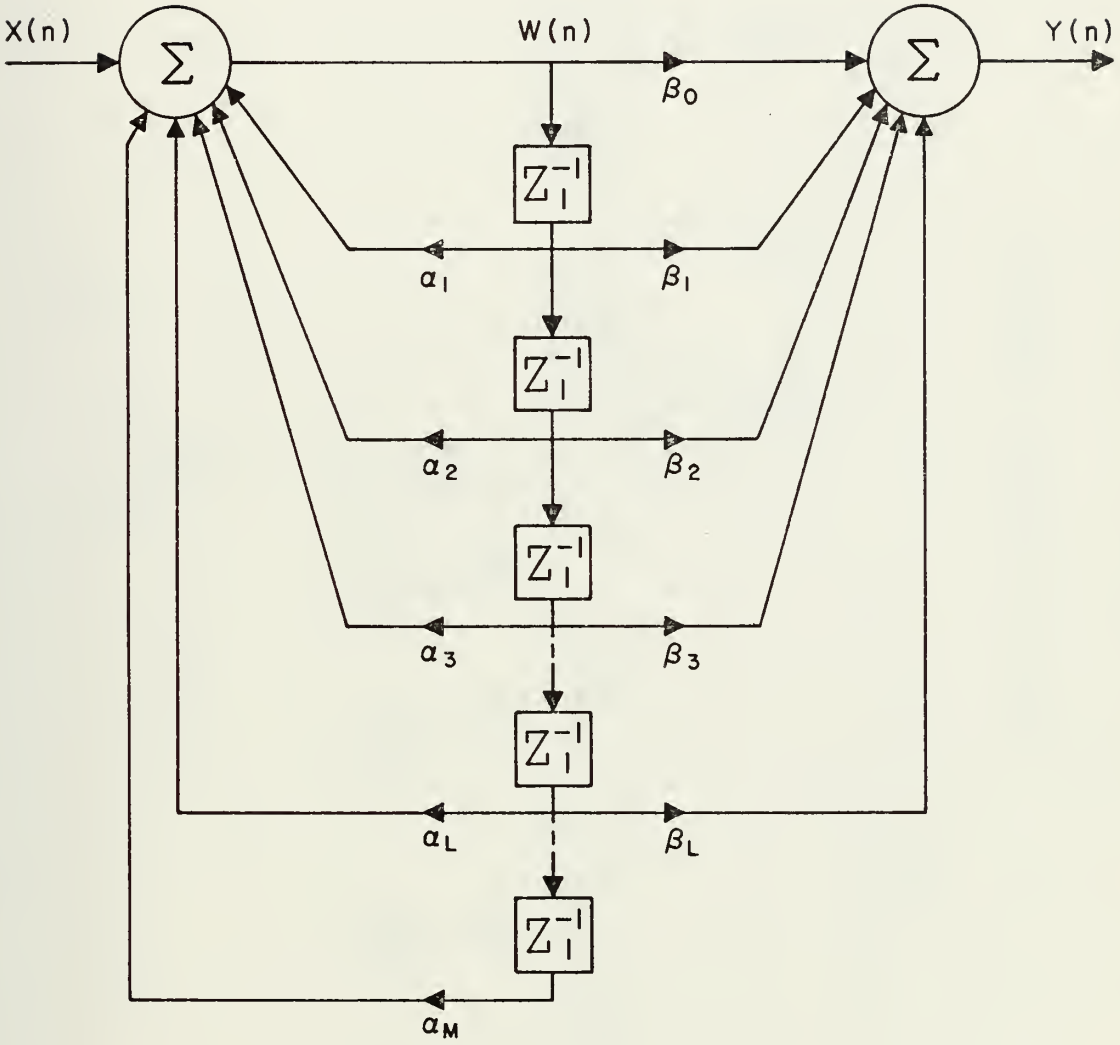

FIG. 3.3: DIRECT FORM 3
(Canonic)

$$H(Z_1) = \frac{\sum_{\ell=0}^{L} \beta_\ell \, Z_1^{-\ell}}{1 - \sum_{m=1}^{M} \alpha_m \, Z_1^{-m}}$$

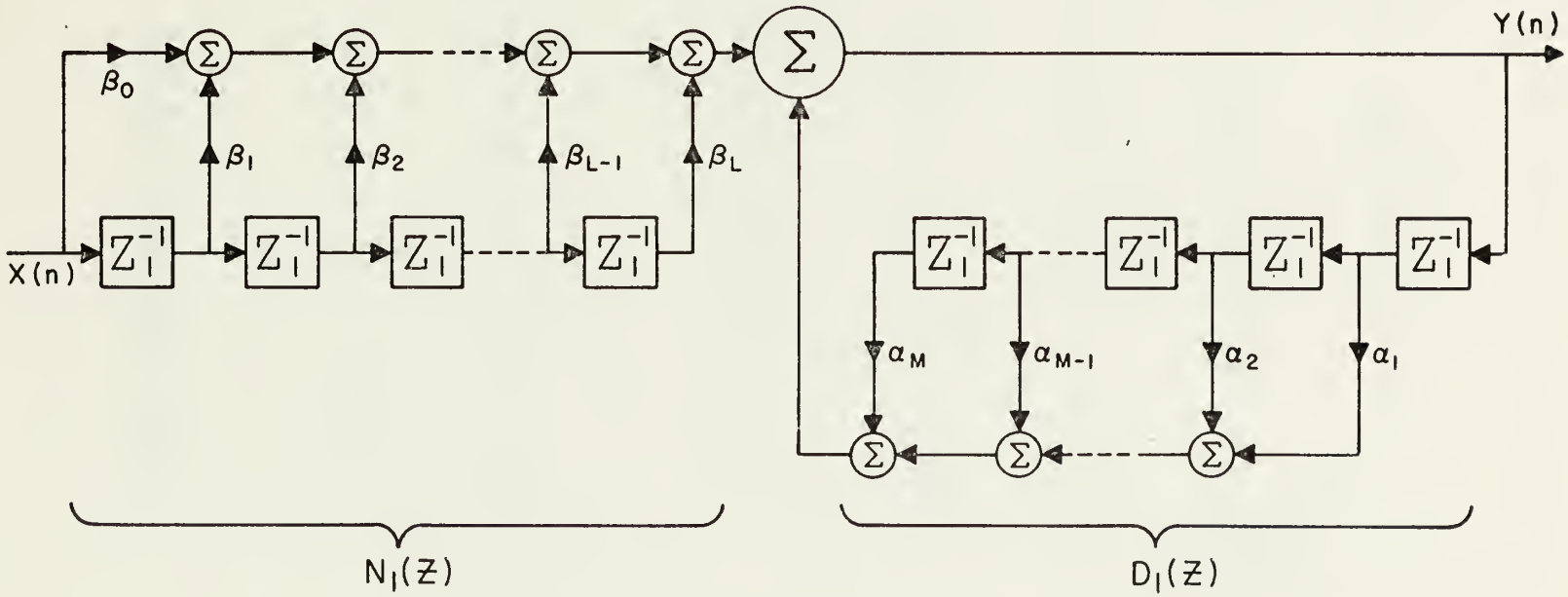

FIG. 3.4: DIRECT FORM 4

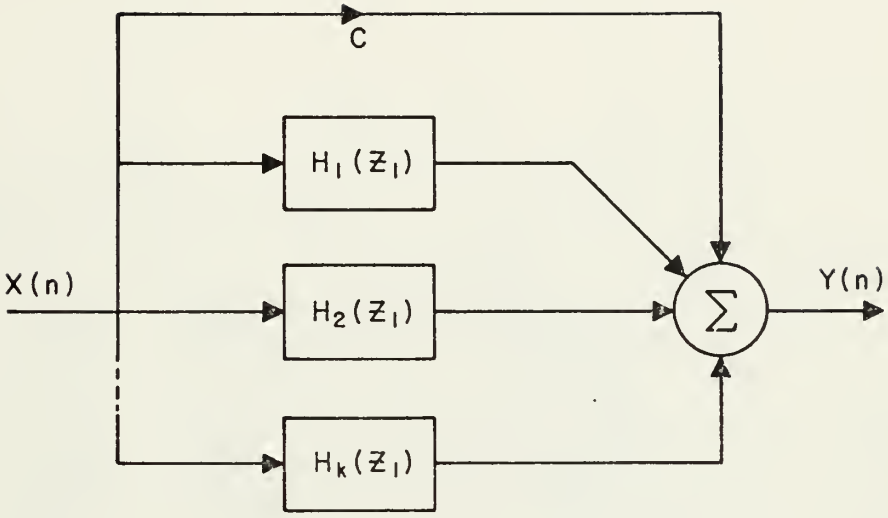

$$H(Z_1) = C + \sum_{i=1}^{k} H_i(Z_1)$$

FIG.3.5: PARALLEL FORM

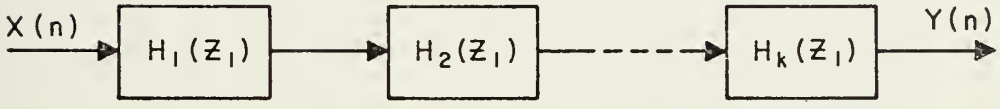

$$H(Z_1) = \prod_{i=1}^{k} H_i(Z_1)$$

FIG.3.6: CASCADE FORM

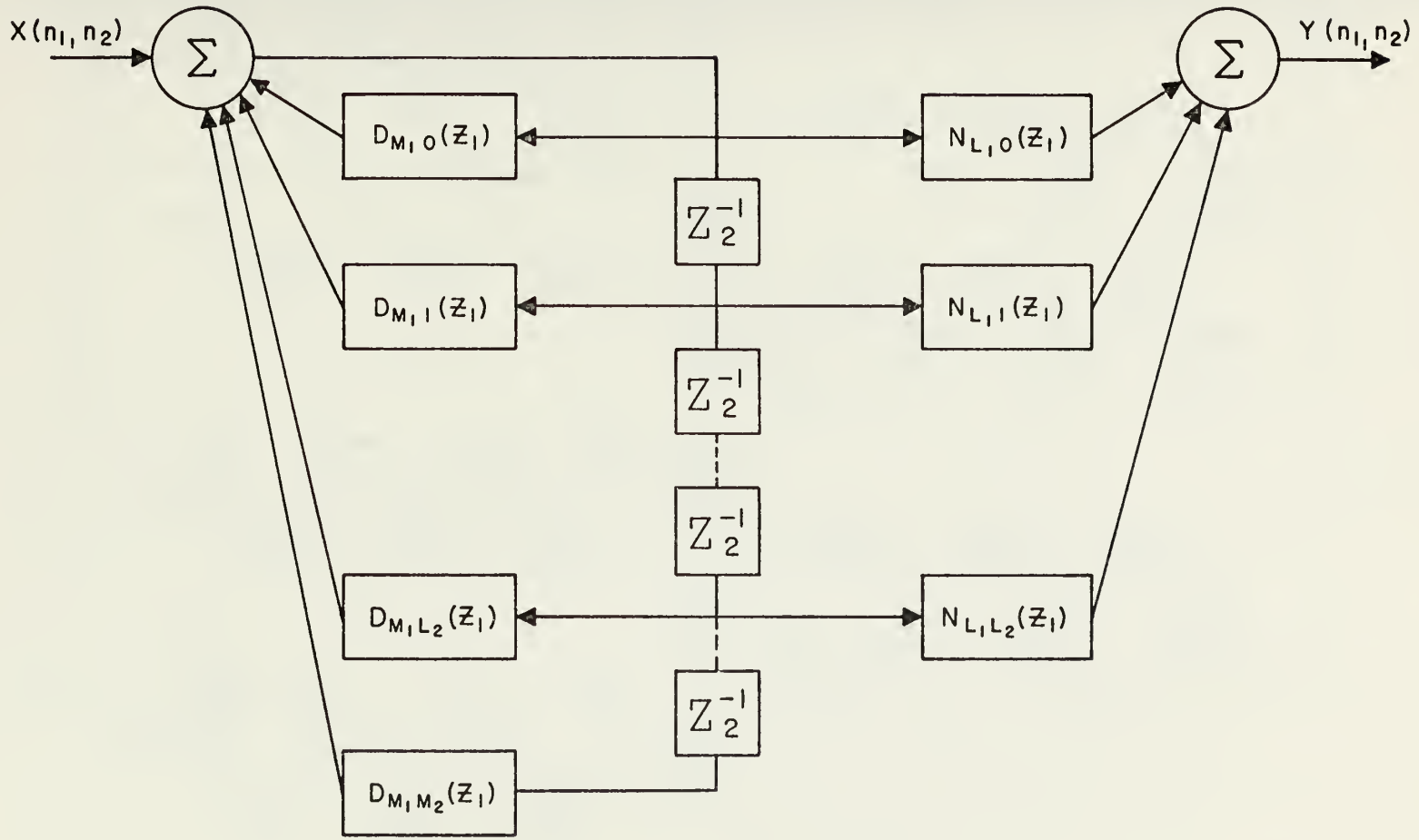

FIG. 3.7: DIRECT FORM 3, 2D

(Compact Notation)

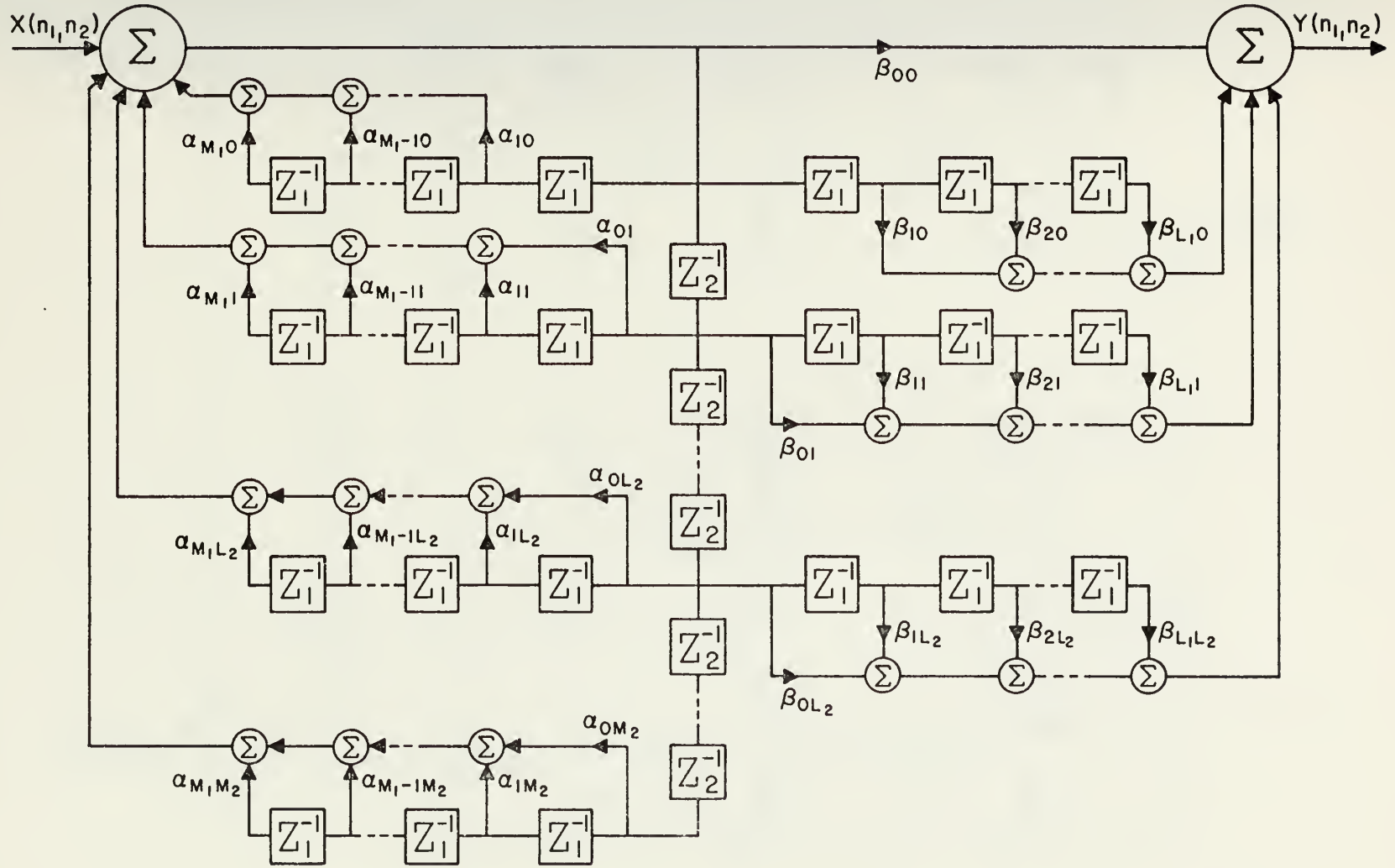

FIG.3.8: DIRECT FORM 3, 2D

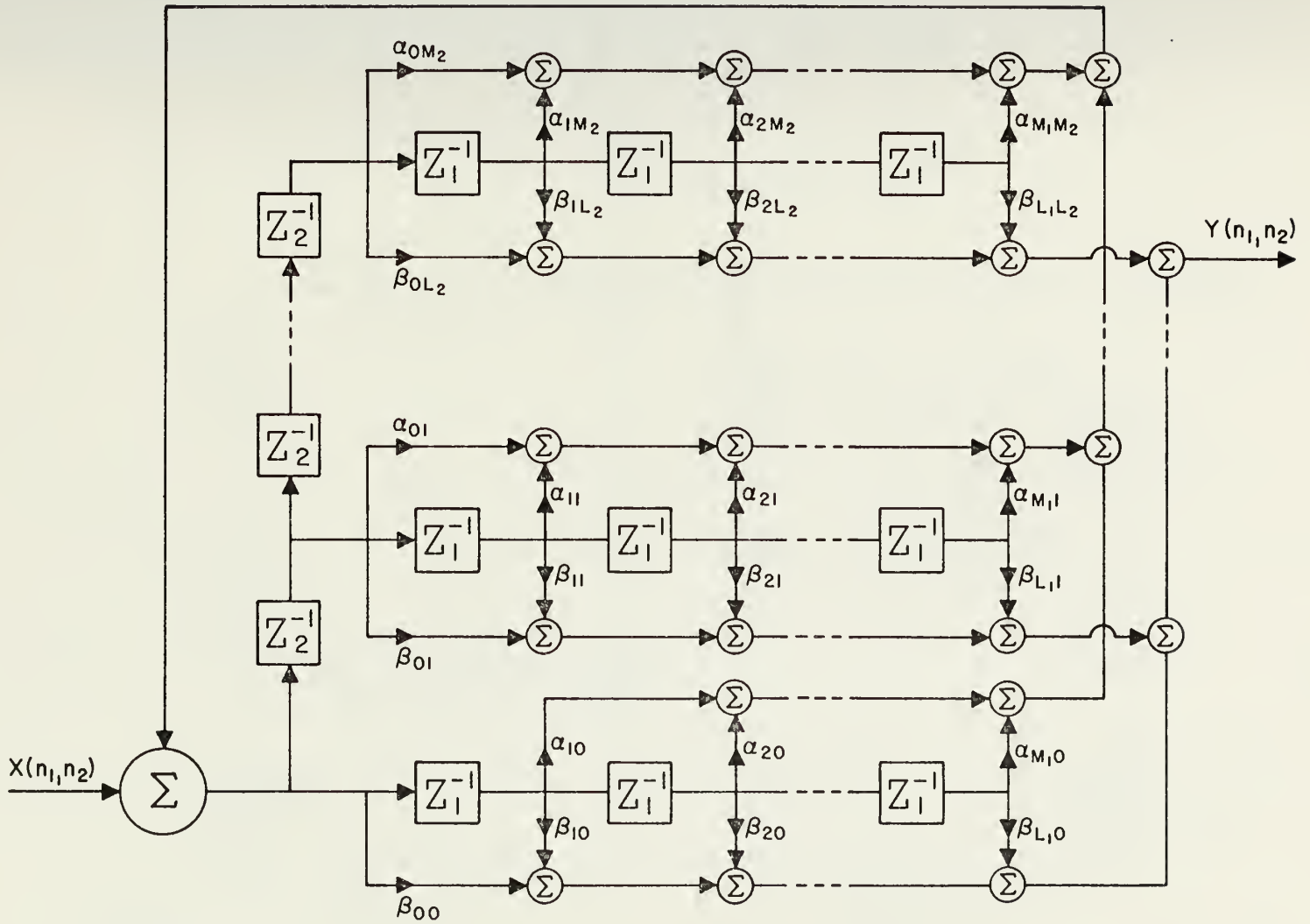

FIG. 3.9: DIRECT FORM 3, 2D

(Canonic)

$$H(Z_1, Z_2) = \frac{\sum_{\ell_2=0}^{L_2} N_{L_1 \ell_2}(Z_1)\ Z_2^{-\ell_2}}{1 - \sum_{m_2=0}^{M_2} D_{M_1 m_2}(Z_1)\ Z_2^{-m_2}}$$

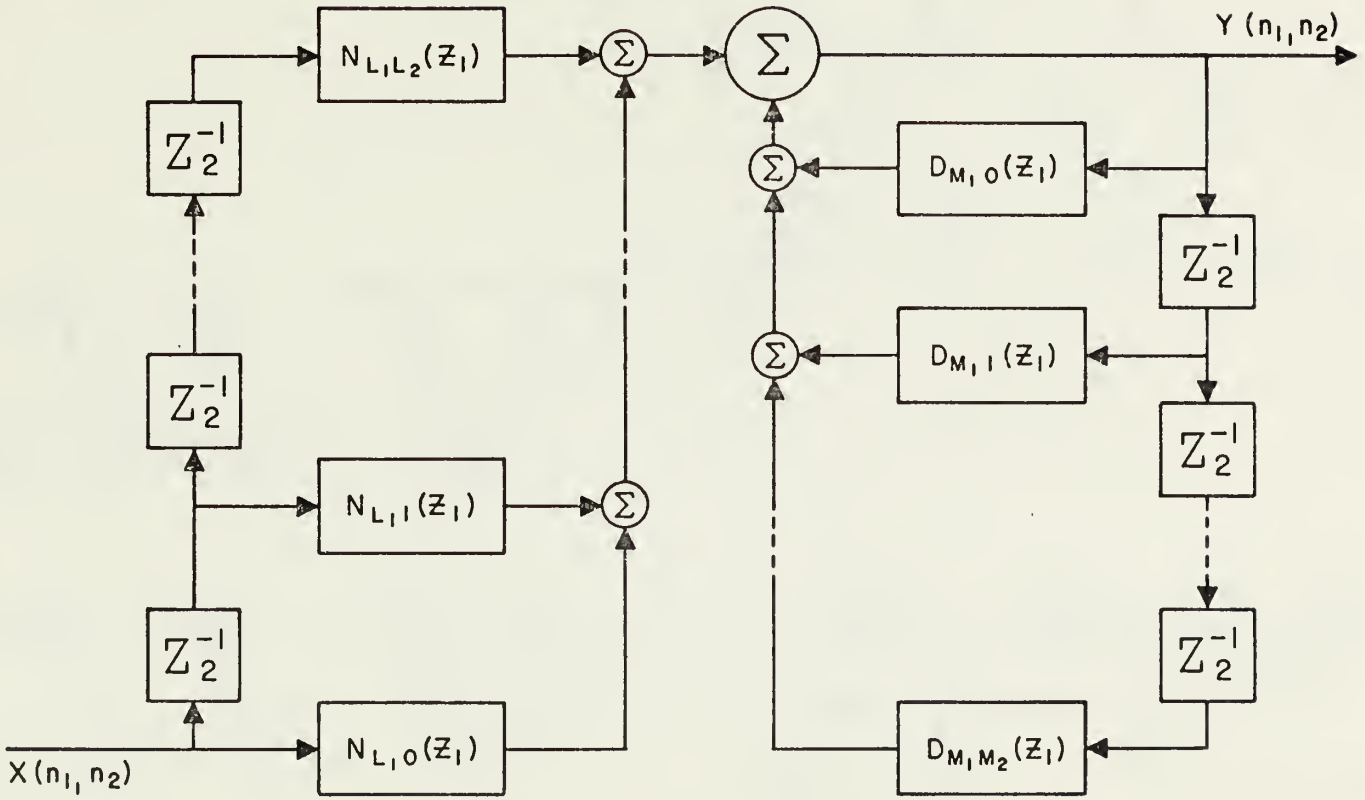

FIG.3.10: DIRECT FORM 4 , 2D

(Compact Notation)

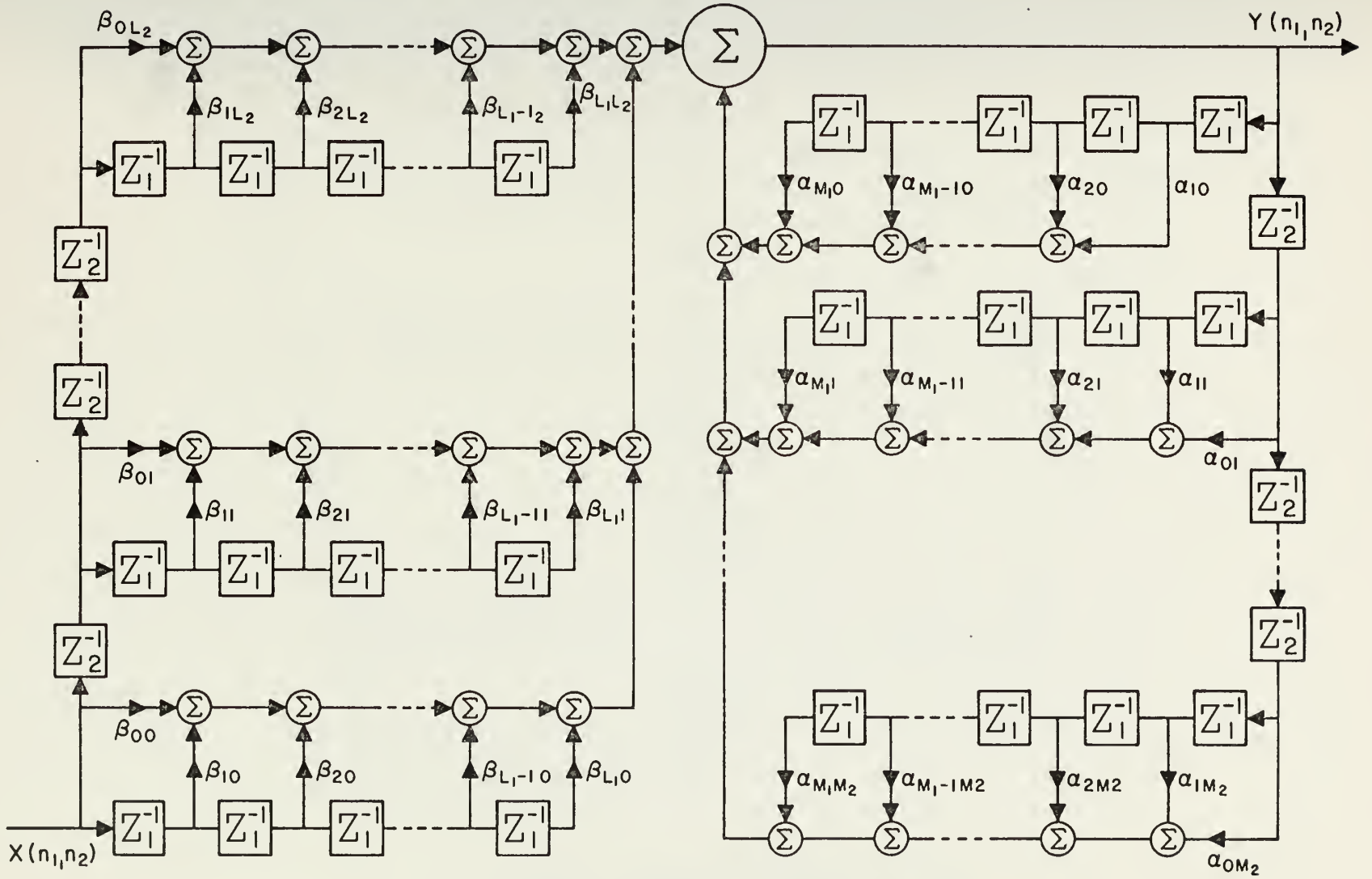

FIG.3.11: DIRECT FORM 4 , 2D

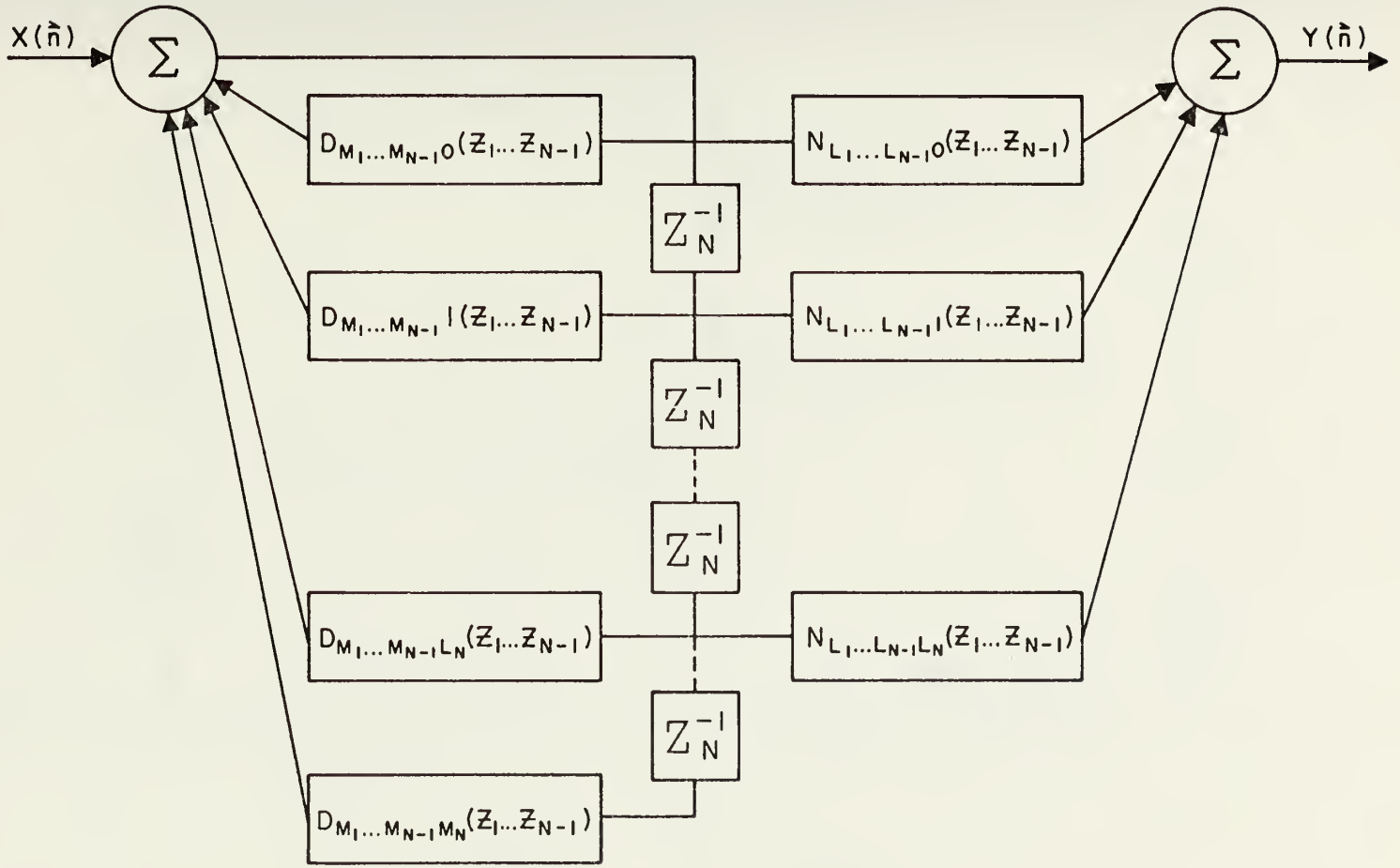

FIG.3.12: DIRECT FORM 3, ND

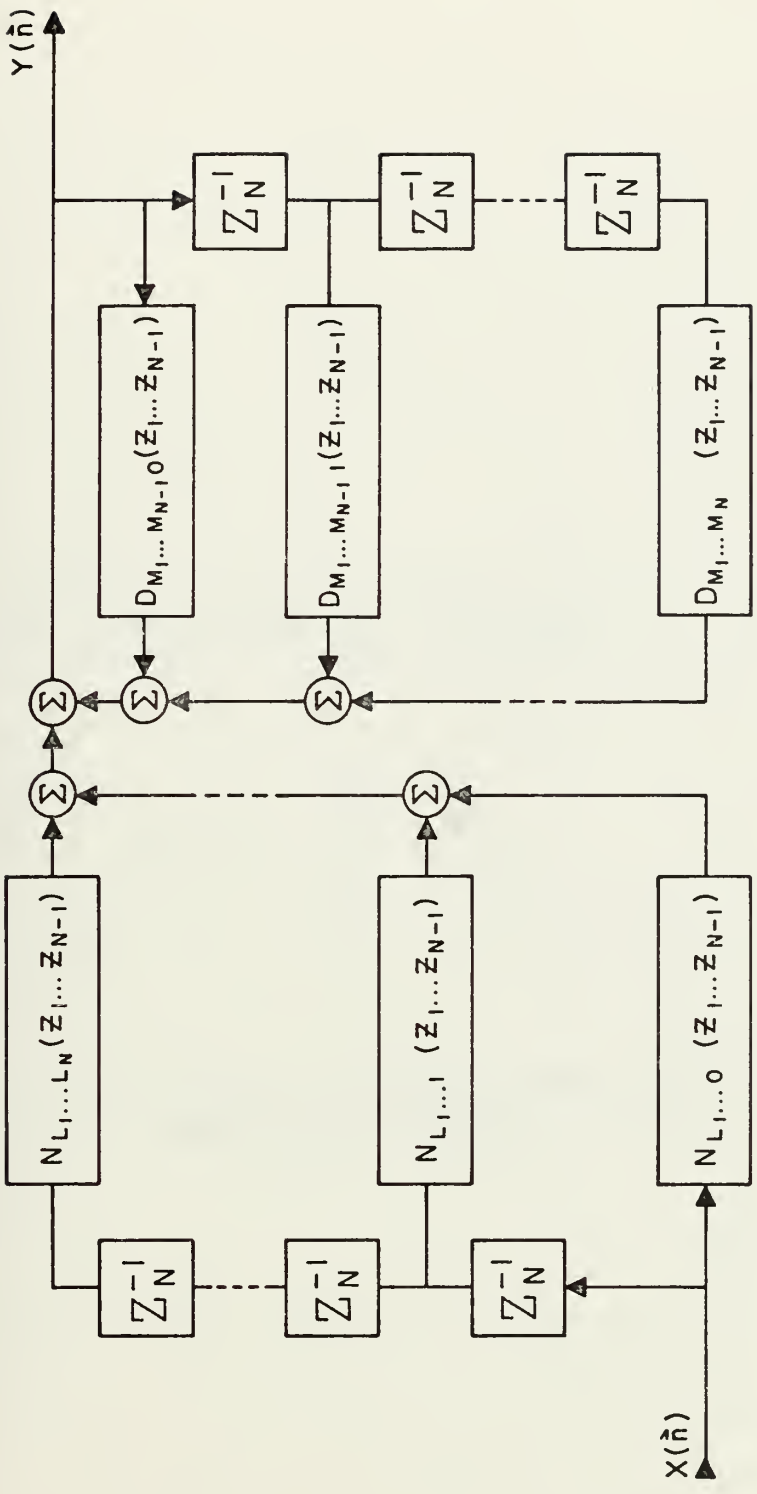

FIG.3.13: DIRECT FORM 4, ND

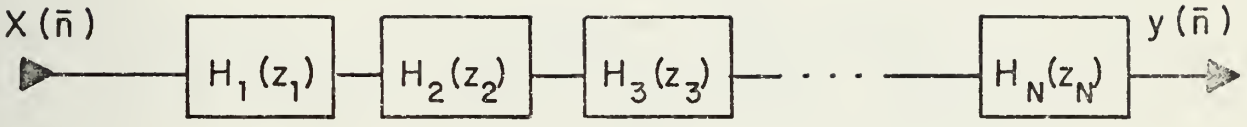

$$H(\bar{z}) = \prod_{i=1}^{N} H_i(z_i)$$

Fig. 3.14: BLOCK DIAGRAM REPRESENTATION OF A SEPARABLE SYSTEM.

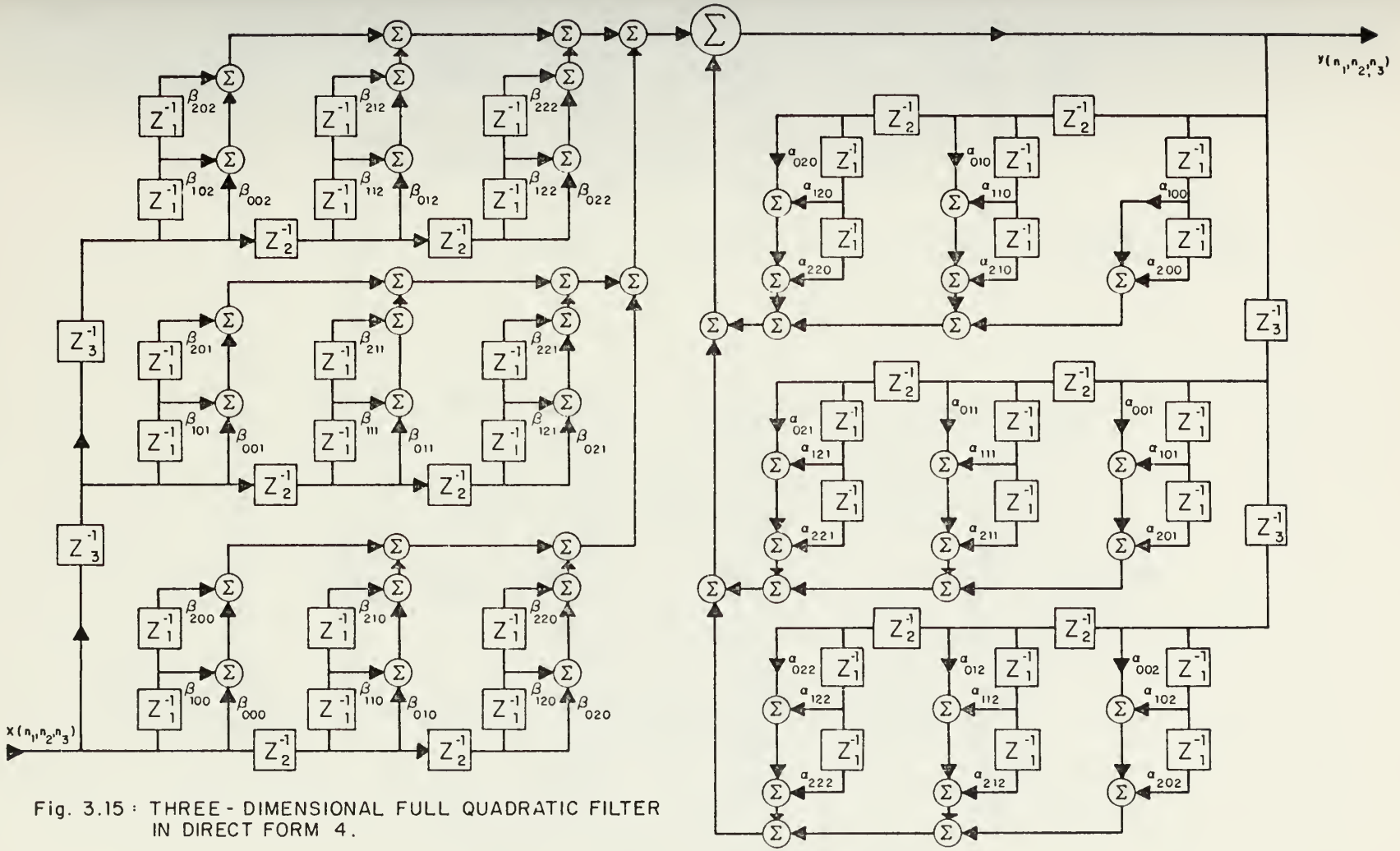

Fig. 3.15 : THREE - DIMENSIONAL FULL QUADRATIC FILTER IN DIRECT FORM 4.

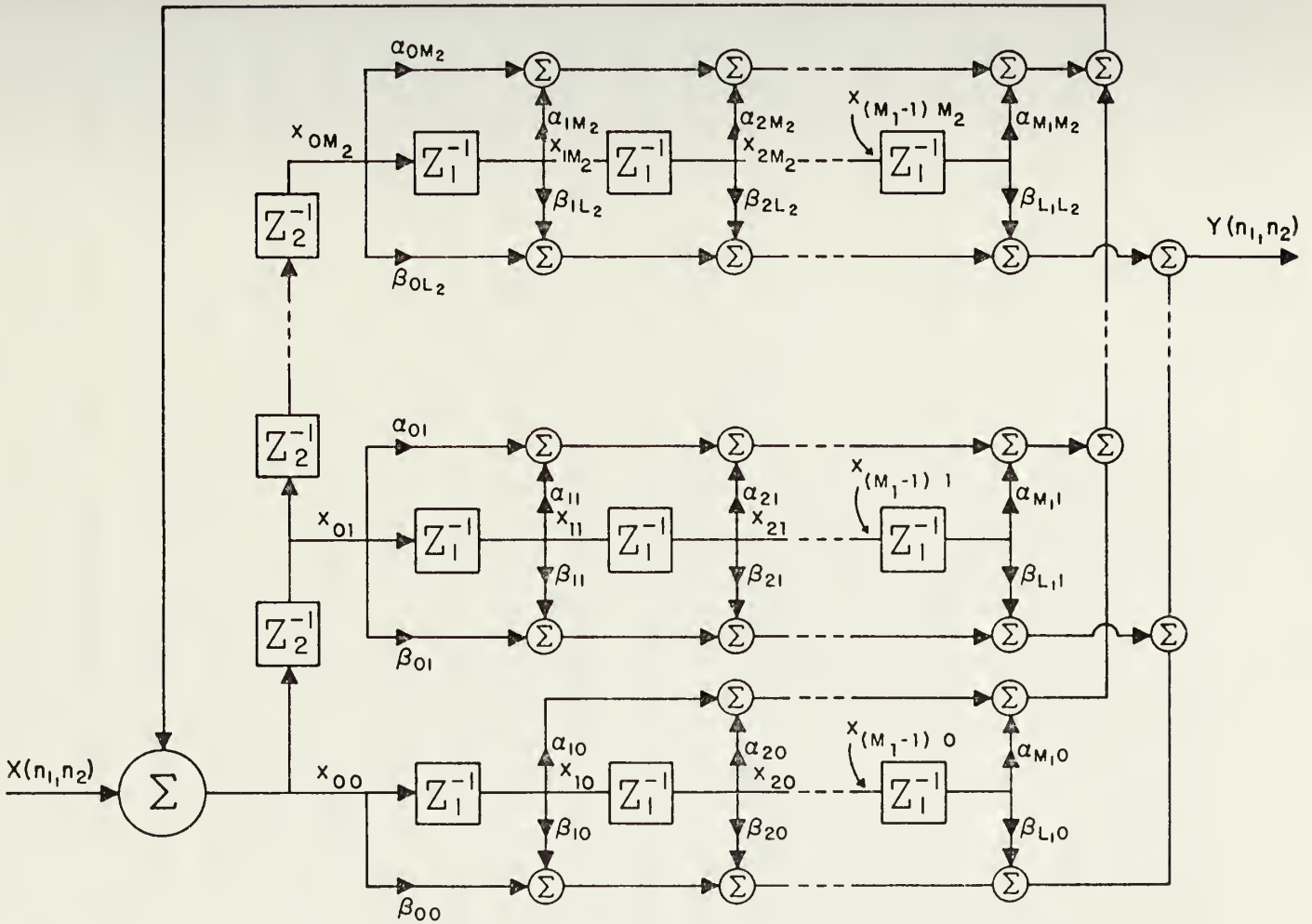

FIG. 3.16: DIRECT FORM 3, 2D

(STATE ANALYSIS)

IV. SERIES METHOD TO DETERMINE STABILITY OF AN N-DIMENSIONAL RECURSIVE FILTER

A. INTRODUCTION

The approximation part in the design of recursive filters is carried out by choosing filter coefficients to approximate a given specification in time or frequency domain and evaluating the stability of the resulting filter transfer function. The generalization of one-dimensional design techniques for recursive digital filters, in particular stability analysis, to the multivariable case is not possible because the fundamental theorem of algebra which permits one to investigate stability of higher-order systems by applying simple conditions to the roots of the factored form representation, cannot be extended to several variables.

Time domain design techniques are developed in Chapters VIII, IX, and X. At this point, however, it is of interest to note that the stability investigation is a decisive part of the design procedure. From the design engineer's point of view, it is very impractical if the stability of each individual filter design variation must be determined using complicated methods which result in time consuming computer use, and when the filter coefficients causing instability cannot be identified and, consequently, no knowledge is obtained to what extent coefficients must be changed to stabilize an unstable system. Due to this fact, the design of multi-dimensional recursive filter has not

been achieved. In fact, there is not even a simple design method available [2].

In the following Chapters, an approach to the solution of the stability problem is presented which is not based on the N-dimensional roots of the characteristic equation. Instead, it employs the N-dimensional Taylor series expansion of a transfer function whose coefficients are values of the unit sample response, $h(\bar{n})$, i.e., the Taylor expansion of $H(\bar{z})$ is:

$$H(\bar{z}) = \sum_{\substack{\bar{n} \\ (0 \le n_i \le \infty)}} h(\bar{n})\, z^{-\bar{n}} \qquad (4.1)$$

It is known that an N-dimensional system is stable if every bounded input produces a bounded output (= BIBO stability). For linear, shift-invariant recursive digital filter a necessary and sufficient condition for BIBO stability is

$$S = \sum_{\substack{\bar{n} \\ (0 \le n_i \le \infty)}} |h(\bar{n})| < \infty \qquad (4.2)$$

Proof: See Appendix C.

To identify stability conditions or conditions for absolute summability of the N-variable sequence of eq (4.2) the general term $h(\bar{n})$ must be identifiable. Four formulas are presented in this chapter for the computation of $h(\bar{n})$ which are based on derivative, recursive, nonrecursive, and nonrecursive combinatorial techniques. Both nonrecursive

formulas express $h(\bar{n})$ explicitly in terms of the N-variable characteristic equation coefficients. Several examples and a comparative evaluation of the formulas demonstrate the perspicuity of the nonrecursive combinatorial method.

The above computational techniques are employed in Chapter V to compute unit sample responses for the bilinear third and fourth-order (uncoupled) two-dimensional transfer functions. By application of derivative operator and Ultraspherical polynomial methods, necessary and sufficient as well as sufficient stability conditions are identified for the above cases. The concept of a "stability region in the coefficient space" is introduced and pictures of the bilinear filter stability region are shown.

In Chapters VI and VII, sufficient conditions and necessary conditions for the general N-dimensional filter, and methods to compute necessary and sufficient conditions for the general N-dimensional transfer function are derived. Several examples are presented to demonstrate the application of the above methods.

B. TAYLOR EXPANSION FORMULA IN N-VARIABLES

The Taylor series expansion formula for a function, $F(\bar{z})$, of N-variables is given in [52] as:

$$F(\bar{z}) = \sum_{k=0}^{\infty} \frac{1}{k!} \left(z_1 \frac{\partial}{\partial z_1} + \ldots + z_N \frac{\partial}{\partial z_N} \right)^k F(\bar{z}) \Big|_{(\bar{0})} \qquad (4.3)$$

where

$$\left(z_1 \frac{\partial}{\partial z_1} + z_2 \frac{\partial}{\partial z_2} + \cdots z_N \frac{\partial}{\partial z_N}\right)^k =$$

$$\left(z_1 \frac{\partial}{\partial z_1} + \cdots + z_N \frac{\partial}{\partial z_N}\right) \cdots \left(z_1 \frac{\partial}{\partial z_1} + \cdots + z_N \frac{\partial}{\partial z_N}\right) \qquad (4.5)$$

denotes a differential operator. Since the expansion will always be taken about the origin, we could also term it Mc Laurin expansion. Following [53], eq (4.3) will now be reformulated into a more intelligible form.

The powers of any term,

$$\left(z_1 \frac{\partial}{\partial z_1}\right)^{i_1} \cdots \left(z \frac{\partial}{\partial z_N}\right)^{i_N} \qquad (4.6)$$

of the expanded form of the product in eq (4.5) will satisfy $i_1 + \cdots + i_N = k$. The number of times the term of eq (4.6) occurs, equals the number of different permutations of the k factor. Thus,*

$$\left(z_1 \frac{\partial}{\partial z_1} + \cdots + z_N \frac{\partial}{\partial z_N}\right)^k =$$

$$\sum_{\bar{i}} \binom{k}{i_1, \ldots, i_N} \left(z_1 \frac{\partial}{\partial z_1}\right)^{i_1} \cdots \left(z_N \frac{\partial}{\partial z_N}\right)^{i_N} \qquad (4.7)$$

where $\bar{i} = [i_1, \ldots, i_N]$ assume all positive values satisfying the relation $i_1 \cdots + i_N = k$.

---

* $\binom{k}{i_1, \ldots, i_N} = \frac{k!}{i_1! \cdots i_N!}$

Equation (4.3) is rewritten, using eq (4.7), as:*

$$F(z) = \sum_{k} \frac{1}{k!} \sum_{\substack{\bar{i} \\ (i_1+\ldots+i_N=k)}} \binom{k}{i_1,\ldots,i_N} \frac{\partial^{i_1+\ldots+i_N}}{\partial z_1^{i_1}\ldots\partial z_N^{i_N}} F(\bar{z}) \Big|_{(\bar{0})} z^{\bar{i}} \qquad (4.8)$$

which is equivalent to

$$F(\bar{z}) = \sum_{\substack{\bar{i} \\ (0\le i_j\le\infty)}} \frac{1}{i_1!\ldots i_N!} \cdot \frac{\partial^{i_1+\ldots+i_N}}{\partial z_1^{i_1}\ldots\partial z_N^{i_N}} F(\bar{z}) \Big|_{(\bar{0})} z^{\bar{i}} \qquad (4.9)$$

Also, if we define

$$F^{(i_1,\ldots,i_N)}(\bar{z}) = \frac{\partial^{i_1+\ldots+i_N}}{\partial z_1^{i_1}\ldots z_N^{i_N}} F(\bar{z}) \qquad (4.10)$$

then eq (4.9) becomes

$$F(\bar{z}) = \sum_{\substack{\bar{i} \\ (0\le i_j\le\infty)}} \frac{1}{i_1!\ldots i_N!} F^{(i_1,\ldots,i_N)}(\bar{z}) \Big|_{(\bar{0})} z^{\bar{i}} \qquad (4.11)$$

This form of the Taylor expansion of a function $F(\bar{z})$ will be used in the subsequent derivations in this chapter. Its application will be demonstrated in the following short example.

Example 4.1:

The first few terms of the Taylor expansion of a third-order two-dimensional transfer function,

*Note $\sum\sum (z_1\frac{\partial}{\partial z_1})^{i_1}\ldots(z_N\frac{\partial}{\partial z_N})^{i_N} F(\bar{z}) = \sum\sum z^{\bar{I}} (\frac{\partial}{\partial z_1^{i_1}})^{i_1} \cdots (\frac{\partial}{\partial z_N^{i_N}})^{i_N} F(\bar{z})$

$$L(z_1,z_2) = \frac{1}{1 - \alpha_{10} z_1 - \alpha_{01} z - \alpha_{20} z_1^2} \qquad (4.12)$$

can be expressed, using eq (4.11), as:

$$L(z_1,z_2) = \sum_{i_1=0}^{\infty} \sum_{i_2=0}^{\infty} \frac{1}{i_1!\, i_2!} L^{(i_1,i_2)}(z_1,z_2) \Big|_{(0,0)} z_1^{i_1} z_2^{i_2}$$

$$= 1 + \frac{\partial}{\partial z_1} L(z_1,z_2) \Big|_{(0,0)} z_1 + \frac{\partial}{\partial z_2} L(z_1,z_2) \Big|_{(0,0)} z_2 +$$

$$+ \frac{\partial}{\partial z_1} \frac{\partial}{\partial z_2} L(z_1,z_2) \Big|_{(0,0)} z_1 z_2 + \frac{\partial^2}{\partial z_1} \frac{\partial}{\partial z_1^2} L(z_1,z_2) \Big|_{(0,0)} z_1^2 z_2 + \ldots$$

$$= 1 + \alpha_{10} z_1 + \alpha_{01} z_2 + 2\alpha_{10}\alpha_{01} z_1 z_2 +$$

$$+ \left(3\alpha_{10}^2 \alpha_{01} + 2\alpha_{01}\alpha_{20}\right) z_1^2 z_2 + \ldots \qquad (4.12a)$$

C. GENERAL TERM OF THE N-DIMENSIONAL TAYLOR EXPANSION

It is useful for later derivations to formulate the Taylor expansion of the N-variable transfer function $H(\bar{z})$, i.e.,

$$H(\bar{z}) = \frac{1}{1 - Q(\bar{z}^{-1})} \qquad (4.13)$$

in terms of $\bar{z}^{-1}$. This will be possible if the expansion of

$$L(\bar{z}) = \frac{1}{1 - Q(\bar{z})} \qquad (4.15)$$

can be found in terms of powers of $\bar{z}$.

In three of the following sections it will be shown that the coefficients of the Taylor expansion of $L(\bar{z})$ can be explicitly derived in terms of the Taylor coefficients of $Q(\bar{z})$.

1. Derivative Formula

If the Taylor expansion formula of $H(\bar{z})$ is written as

$$H(\bar{z}) = \sum_{\substack{\bar{i} \\ (0 \le i_1 \le \infty)}} h(\bar{i})\, z^{-\bar{i}} \tag{4.16}$$

then by eq (4.11), $h(\bar{i})$ is equal to

$$h(\bar{i}) = \frac{1}{i_1! \cdots i_N!} \left. H^{(i_1,\ldots,i_N)}(\bar{z}) \right|_{(\bar{0})} \tag{4.17}$$

2. Recursive Formula

Theorem 4.1: If the Taylor expansion of Q has the form

$$Q(\bar{z}) = \sum_{\substack{\bar{i} \\ (0 \le i_1 \le \infty)}} a_{(\bar{i})}\, z^{\bar{i}} \quad ; \quad a_{(\bar{0})} = 0 \tag{4.18}$$

and the Taylor expansion of

$$L(\bar{z}) = \frac{1}{1 - Q(\bar{z})} \tag{4.19}$$

is

$$L(\bar{z}) = \sum_{\substack{\bar{i} \\ (0 \le i_i \le \infty)}} b_{(\bar{i})} \, z^{\bar{i}} \tag{4.20}$$

then

$$b_{(\bar{i})} = \sum_{\bar{j} < \bar{i}} a_{(\bar{i}-\bar{j})} \, b_{(\bar{j})} \tag{4.21}$$

Proof: It follows directly from eq (4.15) that

$$L(\bar{z}) - L(\bar{z}) \, Q(\bar{z}) = 1.$$

Substituting eqs (4.18) and (4.20), it follows that

$$\sum_{\bar{i}} b_{(\bar{i})} \, z^{\bar{i}} - \sum_{\bar{i}} b_{(\bar{i})} \, z^{\bar{i}} \sum_{\bar{i}} a_{(\bar{i})} \, z^{\bar{i}} = 1$$

When $i = 0$, since $a_{(\bar{0})} = 0$ it follows $b_{(\bar{0})} = 1$. For all values of $\bar{i} \neq 0$ it follows that

$$\sum b_{(\bar{i})} \, z^{\bar{i}} = \sum b_{(\bar{i})} \, z^{\bar{i}} \sum a_{(\bar{i})} \, z^{\bar{i}}$$

As a result

$$b_{(\bar{i})} = \sum_{\bar{j} < \bar{i}} a_{(\bar{i}-\bar{j})} \, b_{(\bar{j})}$$

Example 4.2:

The first few coefficients of the Taylor expansion for $L(z_1,z_2)$, where

$$L(z_1,z_2) = \frac{1}{1 - \alpha_{10} z_1 - \alpha_{01} z_2 - \alpha_{20} z_1^2} \tag{4.22}$$

are computed by eq (4.21), where the only nonzero coefficients of $Q(z_1,z_2)$, which is defined by eq (4.18), are:

$a_{(1,0)} = \alpha_{10}$; $a_{(0,1)} = \alpha_{01}$; $a_{(2,0)} = \alpha_{20}$

$$b_{(i_1,i_2)} = \sum_{\substack{j_1=0 \\ j_1+j_2 \neq i_1+i_2}}^{i_1} \sum_{j_2=0}^{i_2} a_{(i_1=j_1,i_2-j_2)}\, b_{(j_1,j_2)}$$

It follows:

$$b_{(1,0)} = \sum_{\substack{j_1=0 \\ j_1+j_2 \neq 1}}^{1} \sum_{j_2=0} a_{(1-j_1,0-j_2)} \cdot 1 = \alpha_{10}$$

$$b_{(0,1)} = \sum_{\substack{j_1=0 \\ j_1+j_2 \neq 1}} \sum_{j_2=0}^{1} a_{(0-j_1,1-j_2)} \cdot 1 = \alpha_{01}$$

$$b_{(1,1)} = \sum_{\substack{j_1=0 \\ j_1+j_2\neq 1}}^{1} \sum_{j_2=0}^{1} a_{(1-j_1,1-j_2)} = 2\alpha_{01}\alpha_{10}$$

$$b_{(2,0)} = \sum_{\substack{j_1=0 \\ j_1+j_2\neq 2}}^{2} \sum_{j_2=0} a_{(2-j_1,0-j_2)} = \alpha_{20} + \alpha_{10}^{2}$$

$$b_{(2,1)} = \sum_{\substack{j_1=0 \\ j_1+j_2\neq 3}}^{2} \sum_{j_2=0}^{1} a_{(2-j_1,1-j_2)}\, b_{(j_1,j_2)} =$$

$$= \alpha_{10}\, b_{(1,1)} + \alpha_{01}\, b_{(2,0)} + \alpha_{20}\, b_{(0,1)}$$

$$= 3\alpha_{10}^{2}\ \alpha_{01} + 2\alpha_{01}\ \alpha_{20}$$

These coefficients are, of course, the same as in eq (4.12a).

The computations for the $b_{(2,1)}$ coefficient can be displayed graphically in the following manner: if the coefficients of the 2-variable characteristic equation of $L(z_1,z_2)$ are arranged in matrix form, as follows,

$$\begin{vmatrix} 1 & \alpha_{01} & \alpha_{02} & \cdots \\ \alpha_{10} & \alpha_{11} & \alpha_{12} & \cdots \\ \alpha_{20} & \alpha_{21} & \alpha_{22} & \cdots \\ \cdot & \cdot & \cdot & \end{vmatrix}$$

and if we arrange the $b_{(j_1, j_2)}$ in matrix form,

$$\begin{vmatrix} 1 & b_{(0,1)} & b_{(0,2)} & \cdots \\ b_{(1,0)} & b_{(1,1)} & b_{(1,2)} & \cdots \\ b_{(2,0)} & b_{(2,1)} & b_{(2,2)} & \cdots \\ \cdot & \cdot & \cdot & \end{vmatrix}$$

then the equation defining $b_{(2,1)}$,

$$b_{(2,1)} = \sum_{\substack{j_1=0 \\ j_1 + j_2 \neq 3}}^{2} \sum_{j_2=0}^{1} a_{(2-j_1, 1-j_2)} \; b_{(j_1, j_2)}$$

can be visualized as the rotation of the first matrix by 180° and the superimposition on the second matrix, such that $\alpha_{00} = 1$ is above $b_{(2,1)}$. By summing the products of stacked coefficients, as shown in Figure 4, the result is:

$$b_{(2,1)} = \alpha_{10}\, b_{(1,1)} + \alpha_{01}\, b_{(2,0)} + \alpha_{20}\, b_{(0,1)} + \alpha_{21} + \alpha_{11}\, b_{(1,0)}$$

3. Nonrecursive Formula

To compute the term $b_{(\bar{i})}$ using the recursive formula requires the computation of all previous terms, i.e., $b_{(\bar{j})}$, where $\bar{j} < \bar{i}$. To circumvent this disadvantage, a nonrecursive formula is derived in the following paragraphs in which $b_{(\bar{i})}$ is uniquely computed using the set of coefficients in $Q(\bar{z})$.

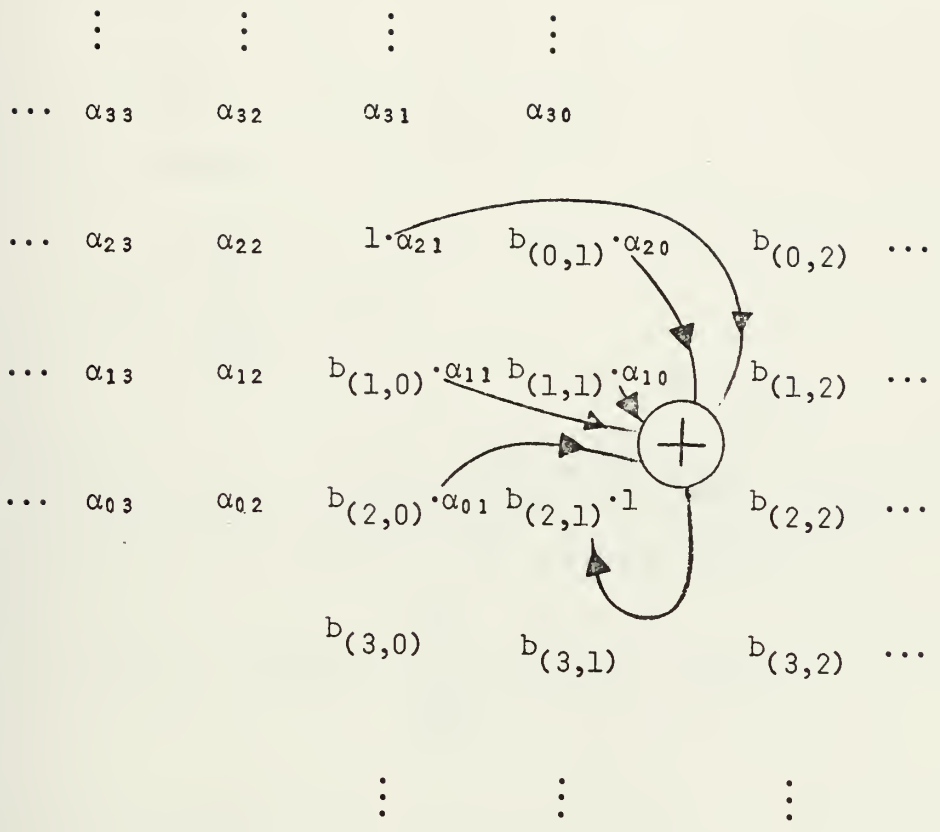
α_{33} α_{32} α_{31} α_{30}
α_{23} α_{22} $1\cdot\alpha_{21}$ $b_{(0,1)}\cdot\alpha_{20}$ $b_{(0,2)}$
α_{13} α_{12} $b_{(1,0)}\cdot\alpha_{11}$ $b_{(1,1)}\cdot\alpha_{10}$ $b_{(1,2)}$
α_{03} α_{02} $b_{(2,0)}\cdot\alpha_{01}$ $b_{(2,1)}\cdot 1$ $b_{(2,2)}$
$b_{(3,0)}$ $b_{(3,1)}$ $b_{(3,2)}$

FIG. 4: GRAPHICAL INTERPRETATION OF EQ (4.21) FOR THE $b_{(2,1)}$ COMPUTATION OF EXAMPLE 4.2

Equation (4.15) can be rewritten as

$$L(\bar{z}) = \sum_{\ell=0}^{\infty} \left[Q(\bar{z})\right]^{\ell} = \sum_{\ell=0}^{\infty} Q^{\ell}(\bar{z}) \tag{4.23}$$

Then, if we define

$$M_{\ell}(\bar{z}) = Q^{\ell}(\bar{z}) \tag{4.24}$$

eq (4.23) becomes

$$L(\bar{z}) = \sum_{\ell=0}^{\infty} M_{\ell}(\bar{z}) \tag{4.25}$$

and taking the $(i_1,\ldots,i_N)$ derivative with respect to $(z_1,\ldots,z_N)$ of both sides in eq (4.25) leads to

$$L^{(i_1,\ldots,i_N)}(\bar{z}) = \sum_{\ell=0}^{\infty} M_{\ell}^{(i_1,\ldots,i_N)}(\bar{z}) \tag{4.26}$$

where the notation of eq (4.10) is used.

It is concluded that the Taylor coefficients for $L(\bar{z})$ expansion can be computed whenever the term $M^{(i_1,\ldots,i_N)}(\bar{z})$ can be calculated.

Theorem 4.2:

If $R(x) = r_1(x)\ldots r_m(x)$, where $r_i(x)$ is a function of one variable, then as shown in Chrystal [54]

$$R^{(\ell)}(x) = \sum_{i_1+\ldots i_m=\ell} \binom{\ell}{i_1,\ldots,i_m} r_1^{(i_1)}(x) \ldots r_m^{(i_m)}(x) \tag{4.27}$$

Theorem 4.2 applied to eq (4.24) results in:

$$M_\ell^{(i_1,0,\ldots,0)}(\bar{z}) = \sum_{j_{10}+\ldots j_{1\ell}=i_1} \binom{i_1}{j_{10},\ldots,j_{1\ell}} Q^{(j_{10},0,\ldots,0)}(\bar{z}) \ldots$$

$$\ldots Q^{(j_{1\ell},0,\ldots,0)}(\bar{z}) \tag{4.28}$$

if Theorem 4.2 is applied again to eq (4.28):

$$M_\ell^{(i_1,i_2,0,\ldots,0)}(\bar{z}) = \sum_{j_{10}+\ldots j_{1\ell}=i_1} \sum_{j_{20}+\ldots j_{2\ell}=i_2} \cdot$$

$$\cdot \binom{i_1}{j_{10},\ldots,j_{1\ell}} \binom{i_2}{j_{20},\ldots,j_{2\ell}} \cdot$$

$$\cdot \quad Q^{(j_{10},j_{20},0,\ldots 0)}(\bar{z}) \ldots Q^{(j_{1\ell},j_{2\ell},0,\ldots 0)}(\bar{z}) \cdot$$

$$\tag{4.29}$$

Then by induction, it follows directly:

$$M_{\ell}^{(i_1,\ldots,i_N)}(\bar{z}) = \sum_{j_{10}+\ldots+j_{1\ell}=i_1} \cdots \sum_{j_{N0}+\ldots+j_{N\ell}=i_N} \cdot \binom{i_1}{j_{10},\ldots,j_{1\ell}} \cdots \binom{i_N}{j_{N0},\ldots,j_{N\ell}} \cdot Q^{(j_{10},\ldots,j_{N\ell})}(\bar{z}) \cdots Q^{(j_{1\ell},\ldots,j_{N\ell})}(\bar{z}) \tag{4.30}$$

Combining the coefficient term of eq (4.9) and eqs (4.26) and (4.30):

$$\frac{1}{i_1!\ldots i_N!} L^{(i_1,\ldots,i_N)}(\bar{z}) = \sum_{\ell=0}^{\infty} \left\{ \sum_{j_{10}+\ldots+j_{1\ell}=i_1} \cdots \sum_{j_{N0}+\ldots j_{N\ell}=i_N} \cdot \left(\frac{1}{j_{10}!\ldots j_{1\ell}!}\right) \cdots \left(\frac{1}{j_{N0}!\ldots j_{N\ell}!}\right) \cdot Q^{(j_{10},\ldots,j_{N0})} \cdots Q^{(j_{1\ell},\ldots,j_{N\ell})} \right\} \tag{4.31}$$

Applying (4.16), (4.17) to

$$Q(\bar{z}) = \sum_{(0 \le i_1 \le \infty)} a_{(\bar{i})} z^{\bar{i}} \quad ; \quad a(\bar{0}) = 0$$

the coefficient term $a_{(\bar{i})}$ is computed as

$$a_{(\bar{i})} = \frac{1}{i_1! \ldots i_N!} Q^{(i_1, \ldots, i_N)}(\bar{z}) \Big|_{(\bar{0})} \tag{4.32}$$

Similarly, for eq (4.20),

$$L(\bar{z}) = \sum_{(0 \le i_1 \le \infty)} b_{(\bar{i})} z^{\bar{i}} \tag{4.33}$$

where

$$b_{(\bar{i})} = \frac{1}{i_1! \ldots i_N!} L^{(i_1, \ldots, i_N)}(\bar{z}) \Big|_{(\bar{0})} \tag{4.34}$$

But by eq (4.31), $b_{(\bar{i})}$ equals

$$b_{(\bar{i})} = \sum_{\ell=0}^{\infty} \Bigg\{ \sum_{\substack{j_{10} + \ldots + j_{1\ell} \\ = i_1}} \cdots \sum_{\substack{j_{N0} + \ldots + j_{N\ell} \\ = i_N}} \cdot$$

$$\cdot \left(\frac{1}{j_{10}! \ldots j_{1\ell}!} \right) \cdots \left(\frac{1}{j_{N0}! \ldots j_{N\ell}!} \right) \cdot$$

$$\cdot Q^{(j_{10}, \ldots, j_{N0})} \cdots Q^{(j_{1\ell}, \ldots, j_{N\ell})} \Bigg\} \Big|_{(\bar{0})} \tag{4.35}$$

If eq (4.32) is applied to eq (4.35), then the result is

summarized as follows:

Theorem 4.3:

If the Taylor expansion of $Q(\bar{z})$ is

$$Q(\bar{z}) = \sum_{\substack{\bar{i} \\ (0 \le \bar{i}_1 \le \infty)}} a_{(\bar{i})} \, z^{\bar{i}} \quad ; \quad a_{(\bar{0})} = 0 \tag{4.36}$$

and if the Taylor expansion of $L = 1/1-Q$ is

$$L(\bar{z}) = \sum_{\substack{\bar{i} \\ (0 \le \bar{i}_1 \le \infty)}} b_{(\bar{i})} \, z^{\bar{i}} \tag{4.37}$$

then for all $\bar{i}$

$$b_{(\bar{i})} = \sum_{\ell=0}^{\infty} \left\{ \sum_{j_{10}+\ldots+j_{1\ell}=i_1} \cdots \sum_{j_{N0}+\ldots+j_{N\ell}=i_N} \cdot a_{(j_{10},\ldots,j_{N0})} \cdots a_{(j_{1\ell},\ldots,j_{N\ell})} \right\} \tag{4.38}$$

Using vector index notation, eq (4.38) becomes

$$b_{(\bar{i})} = \sum_{\ell} \left\{ \sum_{\substack{\bar{j}_0+\ldots+\bar{j}_\ell \\ =\bar{i}}} a_{(\bar{j}_0)} \cdots a_{(\bar{j}_\ell)} \right\} \tag{4.39}$$

where the multiple summation is performed over all ℓ-tuples of vector indices $(\bar{j}_0,\ldots,\bar{j}_\ell)$ which sum to the vector index

$\bar{i}$. The application of Theorem 4.3 is illustrated in the following examples:

Example 4.3:

For the two-dimensional transfer function

$$L(z_1, z_2) = \frac{1}{1 - \alpha_{10} z_1 - \alpha_{01} z_2 - \alpha_{20} z_1^2} \tag{4.40}$$

which was also used in the previous examples, the first two coefficients of the corresponding Taylor expansion are computed as follows:

$$b_{(1,0)} = \sum_{\ell=0}^{\infty} \left\{ \sum_{\substack{j_{10}+\cdots+j_{1\ell} \\ =1}} \sum_{\substack{j_{20}+\cdots+j_{2\ell} \\ =0}} \cdot \right.$$

$$\left. \cdot\, a_{(j_{10}, j_{20})} \cdots a_{(j_{1\ell}, j_{2\ell})} \right\}$$

where the only nonzero coefficients are

$$a_{(1,0)} = \alpha_{10} \tag{4.40a}$$

$$a_{(0,1)} = \alpha_{01} \tag{4.40b}$$

$$a_{(2,0)} = \alpha_{20} \tag{4.40c}$$

For $\ell = 0$ the indices j_{10} and j_{20} sum to $i_1 = 1$ and $i_2 = 0$ whenever $j_{10} = 1$ and $j_{20} = 0$.

For $\ell = 1$, the indices sum to $i_1 = 1$ and $i_2 = 0$ whenever (j_{10}, j_{11}) and (j_{20}, j_{21}) belong to the following set of ordered

pairs:

$$(j_{10},j_{11}) = \{(0,1);\ (1,0)\} \text{ and } (j_{20},j_{21}) = \{(0,0)\}$$

i.e.,

$$\{j_{10}=0,\ j_{11}=1\},\ \{j_{10}=1,j_{11}=0\},\ \text{and}\ \{j_{20}=0,j_{21}=0)\}$$

For $\ell = 2$, following the same line of argument,

$$(j_{10},j_{11},j_{12}) = \{(0,0,1);(0,1,0);(1,0,0)\} \text{ and}$$

$$(j_{20},j_{21},j_{22}) = \{(0,0,0)\}$$

Now, if the indices for $\ell = 0,1,2,\ldots$, and the coefficients of eq (4.40) are substituted in

$$b_{(1,0)} = \sum_{j_{10}=1} \sum_{j_{20}=0} a_{(j_{10},j_{20})} \qquad (\ell = 0)$$

$$+ \sum_{\substack{j_{10}+j_{11} \\ =1}} \sum_{\substack{j_{20}+j_{21} \\ =0}} a_{(j_{10},j_{20})}\ a_{(j_{11},j_{21})} \qquad (\ell = 1)$$

$$+ \sum_{\substack{j_{10}+j_{11}+j_{12} \\ =1}} \sum_{\substack{j_{20}+j_{21}+j_{22} \\ =0}} a_{(j_{10},j_{20})}\ a_{(j_{11},j_{21})}\ a_{(j_{12},j_{22})} \qquad (\ell = 2)$$

$$+ \ldots$$

then the equation on the following page is obtained:

$$b_{(1,0)} = a_{(1,0)} +$$

$$+ a_{(0,0)} a_{(1,0)} + a_{(1,0)} a_{(0,0)} +$$

$$+ a_{(0,0)} a_{(0,0)} a_{(1,0)} + a_{(0,0)} a_{(1,0)} a_{(0,0)} +$$

$$+ a_{(1,0)} a_{(0,0)} a_{(0,0)}$$

$$+ \ldots$$

$$= \alpha_{10} \quad , \text{ since } a_{(0,0)} \equiv 0.$$

Similarly,

$$b_{(0,1)} = \alpha_{01}$$

Example 4.4:

The term, $b_{(5,1)}$ is computed using Theorem 4.3 for the transfer function $L(z_1,z_2)$, which is defined in examples 4.3 as follows:

For $N = 2$, $i_1 = 5$, and $i_2 = 1$, equation (4.38) becomes:

$$b_{(5,1)} = \sum_{\ell=0}^{\infty} \left[\sum_{\substack{j_{10}+\ldots+j_{1\ell} \\ =5}} \sum_{\substack{j_{20}+\ldots j_{2\ell} \\ =1}} a_{(j_{10},j_{20})} \cdots a_{(j_1,j_2)} \right] \qquad (4.41)$$

or

$$b_{(5,1)} = a_{(5,1)} + \qquad (\ell = 0)$$

$$+ \sum_{j_{10}+j_{11}=5} \sum_{j_{20}+j_{21}=1} a_{(j_{10},j_{20})}\, a_{(j_{11},j_{21})} \qquad (\ell = 1)$$

$$+ \sum_{\substack{j_{10}+j_{11}\\ +j_{12}=5}} \sum_{\substack{j_{20}+j_{21}\\ +j_{22}=1}} a_{(j_{10},j_{20})}\, a_{(j_{11},j_{21})}\, a_{(j_{12},j_{22})} \qquad (\ell = 2)$$

$$+ \sum_{\substack{j_{10}+j_{11}+j_{12}\\ +j_{13}=5}} \sum_{\substack{j_{20}+j_{21}+j_{22}\\ +j_{23}=1}} a_{(j_{10},j_{20})}\, a_{(j_{11},j_{21})}\, a_{(j_{12},j_{22})} \cdot$$

$$\cdot\, a_{(j_{13},j_{23})} \qquad (\ell = 3)$$

$$+ \sum_{\substack{j_{10}+j_{11}+j_{12}\\ j_{13}+j_{14}=5}} \sum_{\substack{j_{20}+j_{21}+j_{22}\\ j_{23}+j_{24}=1}} a_{(j_{10},j_{20})}\, a_{(j_{11},j_{21})}\, a_{(j_{12},j_{22})} \cdot$$

$$\cdot\, a_{(j_{13},j_{23})}\, a_{(j_{14},j_{24})} \qquad (\ell = 4)$$

$$+ \sum_{\substack{j_{10}+j_{11}+j_{12}\\ j_{13}+j_{14}+j_{15}\\ =5}} \sum_{\substack{j_{20}+j_{21}+j_{22}\\ j_{23}+j_{24}+j_{25}\\ =1}} a_{(j_{10},j_{20})}\, a_{(j_{11},j_{21})}\, a_{(j_{12},j_{22})} \cdot$$

$$\cdot\, a_{(j_{13},j_{23})}\, a_{(j_{14},j_{24})}\, a_{(j_{15},j_{25})} \qquad (\ell = 5)$$

$$+ \ldots$$

$$\vdots$$

The only nonzero coefficients in the characteristic equation of $L(z_1, z_2)$ are:

$$a_{(1,0)} = \alpha_{10} \tag{4.42}$$

$$a_{(0,1)} = \alpha_{01} \tag{4.43}$$

$$a_{(2,0)} = \alpha_{20} \tag{4.44}$$

It follows from eq (4.41) that the sets of indices

$$\left\{j_{10}, \ldots, j_{1\ell}\right\} \text{ and } \left\{j_{20}, \ldots, j_{2\ell}\right\}$$

must add up to 5 and 1, and the set of ordered pairs:

$$\left\{(j_{10}, j_{20}); \ldots (j_{1\ell}, j_{2\ell})\right\}$$

must correspond to nonzero coefficients, i.e., as listed in eqs (4.42) - (4.44).

Applying this reasoning to term ($\ell = 1$) the two sets of indices are obtained. For

$$(j_{10}, j_{11}), \quad \left\{(0,5);(1,4);(2,3);(3,2);(4,1);(5,0)\right\}$$

and for

$$(j_{20}, j_{21}), \quad \left\{(0,1);(1,0)\right\}$$

It can easily be verified that the products of coefficients, which is defined by term ($\ell = 1$), becomes

$$\sum_{j_{10}+j_{11}=5} \sum_{j_{20}+j_{21}=1} a_{(j_{10},j_{20})}\, a_{(j_{11},j_{21})} =$$

$$= a_{(0,0)}\, a_{(5,1)} + a_{(1,0)}\, a_{(4,1)} + a_{(2,0)}\, a_{(3,1)} +$$

$$+ a_{(3,0)}\, a_{(2,1)} + a_{(4,0)}\, a_{(1,1)} + a_{(5,0)}\, a_{(0,1)} +$$

$$+ a_{(0,1)}\, a_{(5,0)} + a_{(1,1)}\, a_{(4,0)} + a_{(2,1)}\, a_{(3,0)} +$$

$$+ a_{(3,1)}\, a_{(2,0)} + a_{(4,1)}\, a_{(1,0)} + a_{(5,1)}\, a_{(0,0)} = 0$$

Following the same reasoning, the term ($\ell = 2$) becomes

$$\sum_{\substack{j_{10}+j_{11}+j_{12} \\ =5}} \sum_{\substack{j_{20}+j_{21}+j_{22} \\ =1}} a_{(j_{10},j_{20})}\, a_{(j_{11},j_{21})}\, a_{(j_{12},j_{22})} = 0$$

The two sets of indices for the term ($\ell = 3$), which add to 5 and 1, as well as corresponding to nonzero coefficients in eqs (4.42) - (4.44), lead to

$$\sum_{\substack{j_{10}+j_{11}+j_{12} \\ j_{13}=5}} \sum_{\substack{j_{20}+j_{21}+j_{22} \\ j_{23}=1}} a_{(j_{10},j_{20})}\, a_{(j_{11},j_{21})}\, a_{(j_{12},j_{22})}\, a_{(j_{13},j_{23})} =$$

$$= a_{(2,0)}\, a_{(2,0)}\, a_{(1,0)}\, a_{(0,1)} + a_{(2,0)}\, a_{(1,0)}\, a_{(0,1)}\, a_{(2,0)} +$$

$$+ a_{(1,0)}\, a_{(0,1)}\, a_{(2,0)}\, a_{(2,0)} + a_{(0,1)}\, a_{(2,0)}\, a_{(1,0)}\, a_{(2,0)} +$$

$$+ a_{(2,0)} a_{(1,0)} a_{(2,0)} a_{(0,1)} + a_{(1,0)} a_{(2,0)} a_{(0,1)} a_{(2,0)} +$$

$$+ a_{(2,0)} a_{(0,1)} a_{(2,0)} a_{(1,0)} + a_{(0,1)} a_{(1,0)} a_{(2,0)} a_{(2,0)} +$$

$$+ a_{(1,0)} a_{(2,0)} a_{(2,0)} a_{(0,1)} + a_{(2,0)} a_{(2,0)} a_{(0,1)} a_{(1,0)} +$$

$$+ a_{(2,0)} a_{(0,1)} a_{(1,0)} a_{(2,0)} + a_{(2,0)} a_{(2,0)} a_{(0,1)} a_{(1,0)} =$$

$$= 12\ \alpha_{20}^{2}\ \alpha_{10}\ \alpha_{01}$$

Similarly, the term ($\ell = 4$) is

$$\sum_{\substack{j_{10}+j_{11}+j_{12} \\ j_{13}+j_{14}=5}} \sum_{\substack{j_{20}+j_{21}+j_{22} \\ j_{23}+j_{24}=1}} a_{(j_{10},j_{20})} a_{(j_{11},j_{21})}\ a_{(j_{12},j_{22})} a_{(j_{13},j_{23})} a_{(j_{14},j_{24})} =$$

$$= 20\ \alpha_{10}^{3}\ \alpha_{01}\ \alpha_{20}$$

and the term ($\ell = 5$) becomes

$$\sum_{\substack{j_{10}+j_{11}+j_{12} \\ j_{13}+j_{14}=5}} \sum_{\substack{j_{20}+j_{21}+j_{22} \\ j_{23}+j_{24}=1}} a_{(j_{10},j_{20})} a_{(j_{11},j_{21})} a_{(j_{12},j_{22})} a_{(j_{13},j_{23})} \cdot$$

$$\cdot\ a_{(j_{14},j_{24})} a_{(j_{15},j_{25})}$$

$$= 6\ \alpha_{10}^{5}\ \alpha_{01}$$

It can be shown that the terms for $\ell > 5$ are identically zero.

Thus:

$$b_{(5,1)} = 12\ \alpha_{10}\alpha_{01}\alpha_{20}^{2} + 20\ \alpha_{10}^{3}\alpha_{01}\alpha_{20} + 6\ \alpha_{10}^{5}\alpha_{01}$$

These examples show that the application of Theorem 4.3 is straightforward, but not trivial. The computational method allows the determination of some b without requiring the knowledge of any previous b's. The following section develops a nonrecursive combinatorial formula which has several advantages as compared with the above outlined technique.

4. Nonrecursive Combinatorial Formula

Following [53] and using the vector notation defined in Appendix A, i.e.,

$$(\bar{j}) \equiv (j_1,\ldots,j_N)$$

it is defined that two ℓ-tuples

$$(\bar{j}_0,\ldots,\bar{j}_\ell) \quad \text{and} \quad (\bar{j}_0',\ldots,\bar{j}_\ell')$$

are equivalent, i.e.,

$$(\bar{j}_0,\ldots,\bar{j}_\ell) \underset{\sim}{e} (\bar{j}_0',\ldots,\bar{j}_\ell')$$

whenever any given vector index $\bar{j}$ appears the same number of times in each ℓ-tuple. Therefore, if

$$(\bar{j}_0,\ldots,\bar{j}_\ell) \underset{\sim}{e} (\bar{j}_0',\ldots,\bar{j}_\ell')$$

then it can be easily shown that

$$a_{(\bar{j}_0)} \cdots a_{(\bar{j}_\ell)} = a_{(\bar{j}_0')} \cdots a_{(\bar{j}_\ell')}$$

Also given an ℓ-tuple $(\bar{j}_0 \ldots, \bar{j}_\ell)$ of vector indices for each vector index $\bar{j}$, $t_{\bar{j}}$ defines the number of times the vector index $\bar{j}$ repeats among $(\bar{j}_0, \ldots, \bar{j}_\ell)$. It follows directly that

$$a_{(\bar{j}_0)} \cdots a_{(\bar{j}_\ell)} = \prod_{\bar{j}} a_{(\bar{j})}^{t_{\bar{j}}} \tag{4.45}$$

For example, consider the term

$$a_{(\bar{j}_0)} \cdots a_{(\bar{j}_\ell)} = a_{(1,0)}\, a_{(0,1)}\, a_{(2,0)} a_{(1,0)}\, a_{(1,0)}$$

where $\bar{j} = \left\{(1,0);\ (0,1);\ (2,0)\right\}$

then $t_{\bar{j}} = \left\{3;1;1\right\}$ and $a_{(\bar{j}_0)} \cdots a_{(\bar{j}_\ell)} = a_{(1,0)}^{3} a_{(0,1)} a_{(2,0)}$

It is also observed that the sum of $t_{\bar{j}}$ is equal to $\ell + 1$, i.e.,

$$\sum_{\bar{j}} t_{\bar{j}} = [\ell+1] \tag{4.46}$$

If there are $(\bar{s}_0, \ldots, \bar{s}_k)$ distinct vector indices among the ℓ-tuple, $(\bar{j}_0, \ldots, \bar{j}_\ell)$, then $t_{\bar{s}_n} \neq 0$ for $n = 1, \ldots, k$. Since another ℓ-tuple $(\bar{j}_0', \ldots, \bar{j}_\ell')$ is equivalent to $(\bar{j}_0, \ldots, \bar{j}_\ell)$ if and only if each index $(\bar{s}_0, \ldots, \bar{s}_k)$ appears in $(\bar{j}_0', \ldots, \bar{j}_\ell')$ the same number of times $t_{\bar{s}_0}, \ldots, t_{\bar{s}_k}$ it appears in $(\bar{j}_0, \ldots, \bar{j}_\ell)$

it follows from combinatorial theory that the number of ℓ-tuples equivalent to $(\bar{j}_0,\ldots,\bar{j}_\ell)$ equals the multinomial coefficient,

$$\begin{pmatrix} \ell+1 \\ t_{\bar{s}_0},\ldots,t_{\bar{s}_k} \end{pmatrix} = \begin{pmatrix} t_{\bar{s}_0}+\ldots+t_{\bar{s}_k} \\ t_{\bar{s}_0},\ldots,t_{\bar{s}_k} \end{pmatrix} = \frac{\left(t_{\bar{s}_0}+\ldots+t_{\bar{s}_k}\right)!}{t_{\bar{s}_0}!\ldots t_{\bar{s}_k}!} \tag{4.47}$$

Note:

$\bar{s}_k = (i_1,\ldots,i_N)$ is defined with $k = 0,1,\ldots$ for each distinct index $(i_1,\ldots,i_N)$ which appears in the coefficients of $Q(\bar{z})$. $t_{\bar{s}_k}$ is a positive integer.

Combining these results, the following theorem is obtained:

Theorem 4.4:

If the Taylor expansion of $Q(\bar{z})$ is

$$Q(\bar{z}) = \sum_{\substack{\bar{i} \\ (0<i_1<\infty)}} a_{(\bar{i})}\, z^{\bar{i}} \qquad ; \quad a_{(\bar{0})} = 0$$

and the Taylor expansion of $L = 1/1-Q$ is

$$L(\bar{z}) = \sum_{\substack{\bar{i} \\ (0<i_1<\infty)}} b_{(\bar{i})}\, z^{\bar{i}}$$

$$b_{(\bar{i})} = \sum_{t_{\bar{s}_0},\ldots,t_{\bar{s}_k}} \binom{t_{\bar{s}_0}+\ldots+t_{\bar{s}_k}}{t_{\bar{s}_0},\ldots,t_{\bar{s}_k}} a_{(\bar{s}_0)}^{t_{\bar{s}_0}} \cdots a_{(\bar{s}_k)}^{t_{\bar{s}_k}} \qquad (4.48a)$$

where $\left(t_{\bar{s}_0} \cdot \bar{s}_0 + \ldots + t_{\bar{s}_k} \cdot \bar{s}_k = \bar{i}\right)$ must be satisfied. (4.48b)

Example 4.5:

For the two-dimensional transfer function used in the previous examples, the first two coefficients of the corresponding Taylor series expansion are computed as follows:

$$b_{(i_1,i_2)} = \sum_{\substack{t_{(1,0)},t_{(0,1)} \\ t_{(2,0)},}} \binom{(t_{(1,0)}+t_{(0,1)}+t_{(2,0)})}{t_{(1,0)},t_{(0,1)},t_{(2,0)}} a_{(1,0)}^{t_{(1,0)}} a_{(0,1)}^{t_{(0,1)}} a_{(2,0)}^{t_{(2,0)}}$$

where $t_{(1,0)}(1,0) + t_{(0,1)}(0,1) + t_{(2,0)}(2,0) = (i_1,i_2)$

For $i_1 = 1$ and $i_2 = 0$

$$t_{(1,0)}(1,0) + t_{(0,1)}(0,1) + t_{(2,0)}(2,0) = (1,0)$$

whenever $t_{(1,0)} = 1$, $t_{(0,1)} = 0$, $t_{(2,0)} = 0$

Therefore, $b_{(1,0)} = a_{(1,0)} = \alpha_{10}$

Similarly, $b_{(0,1)} = \alpha_{01}$

Example 4.6:

For the transfer function , $L(\bar{z})$, as in example 4.3, compute $b_{(5,1)}$. The only nonzero coefficients in $Q(\bar{z})$ are

$$a_{(1,0)} = \alpha_{10}$$

$$a_{(0,1)} = \alpha_{01}$$

$$a_{(2,0)} = \alpha_{20}$$

Thus, $\bar{s}_0 = (1,0)$

$\bar{s}_1 = (0,1)$

$\bar{s}_2 = (2,0)$

and $t_{(1,0)}(1,0) + t_{(2,0)}(2,0) + t_{(0,1)}(0,1) = (5,1)$ from eq (4.48b), whenever

$t_{(1,0)} = 1$ $\quad t_{(2,0)} = 2$ $\quad t_{(0,1)} = 1$, or

$t_{(1,0)} = 3$ $\quad t_{(2,0)} = 1$ $\quad t_{(0,1)} = 1$, or

$t_{(1,0)} = 5$ $\quad t_{(2,0)} = 0$ $\quad t_{(0,1)} = 1$.

Therefore, substituting into (4.48a),

$$b_{(5,1)} = \binom{1+1+2}{1,1,2} \alpha_{10}\,\alpha_{01}\,\alpha_{20}^{2} + \binom{3+1+1}{3,1,1} \alpha_{10}^{3}\,\alpha_{01}\,\alpha_{20} +$$

$$+ \binom{5+1}{5,1} \alpha_{10}^{5}\,\alpha_{01} =$$

$$= 12\ \alpha_{10}\,\alpha_{01}\,\alpha_{20}^{2} + 20\ \alpha_{10}^{3}\,\alpha_{01}\,\alpha_{20} + 6\ \alpha_{10}^{5}\,\alpha_{01}$$

5. Comparison of results

The four computational schemes presented in Part C are summarized as follows:

The derivative method is very difficult to apply since the computation of the $b_{(\bar{i})}^{th}$ coefficient of the Taylor expansion of $L(\bar{z})$ requires taking the $(i_1,\ldots i_N)^{th}$ partial derivatives of $L(\bar{z})$ and evaluate the result at zero. This technique cannot be easily implemented on a digital computer.

The recursive method requires for the computation of $b_{(\bar{i})}$ the knowledge of all $b_{(\bar{j})}$, where $\bar{j} < \bar{i}$. This technique is best suited for computer implementation, especially when computing a finite set of coefficients, i.e., $\{b_{(\bar{i})}\}$, where $0 \le i_i \le I_i$. It will be used extensively in Chapter V.

The nonrecursive and nonrecursive combinatorial formulas relate the coefficient $b_{(\bar{i})}$ explicitly to the coefficients of the N-dimensional characteristic equation. To compute $b_{(k,j)}$ for the transfer function,

$$L(z_1,z_2) = \frac{1}{1 - \alpha_{10} z_1 - \alpha_{01} z_2 - \alpha_{20} z_1^2}$$

Using the nonrecursive technique of Theorem 4.3 requires:

$$\sum_{m=0}^{\left[\frac{k}{2}\right]} \frac{(k-m+j)!}{j!\ m!\ (k-2m)!}$$

multiplications in addition to identifying the same number of index sets, where [X] means the largest integer $\leq X$.

When applying the nonrecursive combinatorial method of Theorem 4.4, only $\left[\frac{k}{2}\right] + 1$ multiplications must be performed in addition to identifying $\left[\frac{k}{2}\right]$ number of t's and multinomial coefficients, which are tabulated in [55]. The following table further elucidates the comparison of the number of multiplications to obtain $b_{(k,j)}$ for the above $L(z,z)$:

$(k,j)^{th}$ term		Number of computations	
k =	j =	Th 4.3	Th 4.4
0	0	1	1
1	1	2	1
2	2	9	2
3	3	40	2
4	4	190	3
5	5	924	3
10	10	3045185	6
15	15	1.1473 E + 10	8
20	20	4.5734 E + 13	11
25	25	1.881 E + 17	13
30	30	7.89227 E + 20	16

The tremendous savings in computations when applying the nonrecursive combinatorial method of Theorem 4.4 are obvious.

There is one important application of Theorem 4.4 which will be used in Chapter VII to establish a mathematical

formulation for the propagation of transfer function coefficients in unit sample responses in any dimension and any order. These rules are then used to develop in Chapter VIII a transfer function extraction algorithm, which in turn is used in Chapter IX to develop time domain design techniques. Therefore, the high speed characteristic which evolves from the few multiplications is exceptional but the mathematical form is of greater importance for the subsequent chapters of this thesis.

D. UNIT SAMPLE RESPONSE

By comparison of eqs (4.13) and (4.19), the relationship $H(\bar{z}) = L(\bar{z}^{-1})$ is easily identified. The following theorem establishes the relationship of the unit sample response entry $h(\bar{i})$ and $b_{(\bar{i})}$, where $h(\bar{i})$ is also the $\bar{i}^{th}$ coefficient of the Taylor expression of $H(\bar{z})$.

Theorem 4.5:

If the Taylor expansion of $Q(\bar{z})$ is

$$Q(\bar{z}) = \sum_{\substack{\bar{i} \\ (0 \le i_i \le \infty)}} a_{(i)} z^{\bar{i}} \quad ; \quad a_{(\bar{0})} = 0 \tag{4.49}$$

and if the Taylor expansion of $L(\bar{z}) = \frac{1}{1 - Q(\bar{z})}$ is

$$L(\bar{z}) = \sum_{\substack{\bar{i} \\ (0 \le i_i \le \infty)}} b_{(\bar{i})} z^{\bar{i}} \tag{4.50}$$

then for the Taylor expansion of $H(\bar{z}) = \dfrac{1}{1 - Q(\bar{z}^{-1})}$ in the form

$$H(\bar{z}) = \sum_{\substack{\bar{i} \\ (0<i_i<\infty)}} h(\bar{i})\, z^{-\bar{i}} \qquad (4.51)$$

each and every $b_{(\bar{i})} \equiv h(\bar{i})$ for all $\bar{i}$, and the coefficients $h(\bar{i})$ are related to $a_{(\bar{i})}$ as stated in eq (4.17) and in Theorems 4.1, 4.3, and 4.4.

Note that the notation $h(\bar{i})$, instead of $h_{(\bar{i})}$, is the commonly accepted one to designate the $\bar{i}^{th}$ coefficient of the unit sample response.

Table 4 summarizes the $h(\bar{i})$ versus $a_{(\bar{i})}$ relationships.

Equation (4.51) can be written for the two-dimensional case as matrix product:

$$H(z_1,z_2) = (1 \quad z_1^{-1} \; z_1^{-2} \ldots)\, \underline{\bar{A}}\, (1 \quad z_2^{-1} \; z_2^{-2} \ldots)^t$$

where

$$\underline{\bar{A}} = \begin{pmatrix} h(0,0) & h(0,1) & h(0,2) & h(0,3) & \ldots \\ h(1,0) & h(1,1) & h(1,2) & h(1,3) & \ldots \\ h(2,0) & h(2,1) & h(2,2) & h(2,3) & \ldots \\ h(3,0) & h(3,1) & h(3,2) & h(3,3) & \ldots \\ \vdots & \vdots & \vdots & \vdots & \end{pmatrix}$$

and $h(0,0) = 1$.

TABLE 4: FORMULAS FOR COMPUTING UNIT SAMPLE RESPONSE ENTRIES $h(\bar{n})$ FROM A GIVEN TRANSFER FUNCTION $H(\bar{z})$

Method	Equation (theorem)	Formula
1. Derivative	4.17	$h(\bar{n}) = \frac{1}{n_1! \cdots n_N!} H^{(i_1,\ldots,i_N)} \Big\vert_{(\bar{0})}$
2. Recursive	4.21 (4.1)	$h(\bar{n}) = \sum\sum_{\bar{j}<\bar{n}} a_{(\bar{n}-\bar{j})} h_{(\bar{j})}$
3. Nonrecursive	4.38 (4.3)	$h(\bar{n}) = \sum_{\ell} \left\{ \sum\sum_{\bar{j}_0+\cdots+\bar{j}_\ell=\bar{n}} a_{(\bar{j}_0)} \cdots a_{(\bar{j}_\ell)} \right\}$
4. Nonrecursive Combinatorial	4.48 (4.4)	$h(\bar{n}) = \sum_{t_{\bar{S}_0},\cdots,t_{\bar{S}_k}} \binom{t_{\bar{S}_0}+\cdots+t_{\bar{S}_k}}{t_{\bar{S}_0},\ldots,t_{\bar{S}_n}} a_{(\bar{S}_0)}^{t_{\bar{S}_0}} \cdots a_{(\bar{S}_k)}^{t_{\bar{S}_k}}$ $(t_{\bar{S}_0}\cdot\bar{S}_0+\ldots+t_{\bar{S}_k}\cdot\bar{S}_k) = \bar{n}$

V. APPLICATION OF SERIES METHOD FOR THE DERIVATION OF STABILITY CONDITIONS IN TWO-DIMENSIONS

A. INTRODUCTION

The formulation developed in Chapter IV is applied to compute the unit sample response matrix $\{h(n_1,n_2)\}$ of the third and fourth order uncoupled, as well as second order coupled transfer functions. Conditions for absolute convergence of matrix $\{h(n_1,n_2)\}$, i.e.,

$$S = \sum_{n_1=0}^{\infty} \sum_{n_2=0}^{\infty} |h(n_1,n_2)| < \infty \qquad (5.1)$$

which are proven in Appendix C to be identical to BIBO stability conditions, are found in two steps:

(a) for the partial infinite sum of absolute entries in each column (row), and

(b) for the infinite sum of column (row) sums, where the sequence of summation steps corresponds to Cauchy's method one (two) respectively. It is shown in Appendix K, that the summation of successive diagonals, which is Cauchy's method three, leads to the same result.

For the third and fourth order uncoupled transfer function the latter method is used in conjunction with binomial theory, resulting in a sequence of geometric series for which convergency conditions are known. In order to apply the binomial theorem in forming the sum of successive diagonals in $\{|h(n_1,n_2)|\}$, the absolute signs must be removed. This is

done, except for the trivial case, by identifying each entry $h(n_1,n_2)$ to represent an Ultraspherical polynomial. By using its known characteristics, necessary and sufficient, as well as sufficient stability conditions, are derived (see tables 5.1a, 5.1b).

It is also shown that in the second order coupled case, Cauchy's methods one or two in conjunction with derivative operator theory results in a sequence of geometric series for which necessary conditions for column convergence and necessary and sufficient conditions for column sum convergence are identified (see table 5.1c).

B. UNCOUPLED FILTER

Definition: Uncoupled Filter

A two-dimensional digital transfer function is uncoupled, if its two-dimensional characteristic equation has no cross terms, i.e., terms of the form $\alpha_{n_1 n_2} z_1^{-n_1} z_2^{-n_2}$, where n_1 and n_2 are both non zero.

The general uncoupled two-dimensional transfer function can be written as

$$H(z_1,z_2) = \frac{1}{g(z_1) - h(z_2)} \tag{5.2}$$

$$= \sum_{p=0}^{\infty} [h(z_2)]^p \, [g(z_1)]^{-p-1} \tag{5.3}$$

Transfer Function $H(z_1,z_2)$	Case	Stability Conditions
$\dfrac{1}{1 - \alpha_{10}z_1^{-1} - \alpha_{01}z_2^{-1} - \alpha_{20}z_1^{-2}}$	$\alpha_{20} \geq -\dfrac{\alpha_{10}^2}{4}$	Necessary and Sufficient: $\alpha_{20} < 1 - \lvert\alpha_{10}\rvert - \lvert\alpha_{01}\rvert$
	$\alpha_{20} < -\dfrac{\alpha_{10}^2}{4}$	Sufficient: $\lvert\alpha_{01}\rvert \leq \dfrac{\sin\theta\sqrt{-\alpha_{20}}\,[\theta^2+\ln^2\sqrt{-\alpha_{20}}\,](1-\sqrt{-\alpha_{20}}\frac{\pi}{\theta})}{c\cdot\theta(1+\sqrt{-\alpha_{20}}\frac{\pi}{\theta})}$ $\theta = \arccos\left(\dfrac{\alpha_{10}}{2\sqrt{-\alpha_{20}}}\right)$ $c = 1.11$

TABLE 5.1a: STABILITY CONDITIONS FOR THIRD ORDER (UNCOUPLED) FILTER IN TWO-DIMENSIONS

Transfer Function $H(z_1,z_2)$	Case	Stability Conditions
$\dfrac{1}{1 - \alpha_{10}z_1^{-1} - \alpha_{01}z_2^{-1} - \alpha_{20}z_1^{-2} - \alpha_{02}z_2^{-2}}$	$\alpha_{20} \geq 0 \quad , \quad \alpha_{02} \geq 0$ $\alpha_{20} \geq 0 \quad , \; 0 > \alpha_{02} \geq -\dfrac{\alpha_{01}^2}{4}$ $0 > \alpha_{20} \geq -\dfrac{\alpha_{10}^2}{4} \; , \; \alpha_{02} \geq 0$	Necessary and sufficient: $\alpha_{20} + \alpha_{02} < 1 - \lvert\alpha_{10}\rvert - \lvert\alpha_{01}\rvert$
	$\alpha_{20} < 0 \quad , \quad \alpha_{02} < 0$	Sufficient: $\lvert\alpha_{20}\rvert + \lvert\alpha_{02}\rvert < 1 - \lvert\alpha_{10}\rvert - \lvert\alpha_{01}\rvert$

TABLE 5.1b: STABILITY CONDITIONS FOR FOURTH ORDER (UNCOUPLED) FILTER IN TWO-DIMENSIONS

Transfer Function $H(z_1,z_2)$	Case	Stability Condition
$\dfrac{1}{1 - \alpha_{10}z_1^{-1} - \alpha_{01}z_2^{-1} - \alpha_{11}z_1^{-1}z_2^{-1}}$	$\lvert\alpha_{10}\rvert < 1$	Necessary: $\lvert\alpha_{01}+\alpha_{11}\rvert < 1 - \alpha_{10}$ $\lvert\alpha_{01}-\alpha_{11}\rvert < 1 + \alpha_{10}$

TABLE 5.1c: STABILITY CONDITIONS FOR SECOND ORDER (COUPLED) FILTER IN TWO-DIMENSIONS

1. Third Order Uncoupled Transfer Function

For $$g(z_1) = 1 - \alpha_{10} z_1^{-1} - \alpha_{20} z_1^{-2} \tag{5.4}$$

$$h(z_2) = \alpha_{01} z_2^{-1} \tag{5.5}$$

eqs (5.2) and (5.3) become

$$H(z_1, z_2) = \frac{1}{1 - \alpha_{10} z_1^{-1} - \alpha_{20} z_1^{-2} - \alpha_{01} z_2^{-1}} \tag{5.6}$$

$$= \sum_{p=0}^{\infty} (1 - \alpha_{10} z_1^{-1} - \alpha_{20} z_1^{-2})^{-(p+1)} \alpha_{01}^{p} z_2^{-p} \tag{5.7}$$

Equation (5.6) is realized in direct form as shown in Fig 5.1. Note that the direct forms are identical whenever the numerator polynomial is equal to unity. Equation (5.7) can be used to implement the third order uncoupled recursive filter in hybrid form, i.e., non-recursive structure with recursively realized components as shown in Fig 5.2.

a. Unit Sample Response

The planar unit sample response $\underline{\underline{A}}$ of the two-dimensional third order transfer function (5.6) is listed in Table 5.2. The details of computations, which are performed using the recursive formula of Theorem 4.1 are contained in Appendix I, Section A.

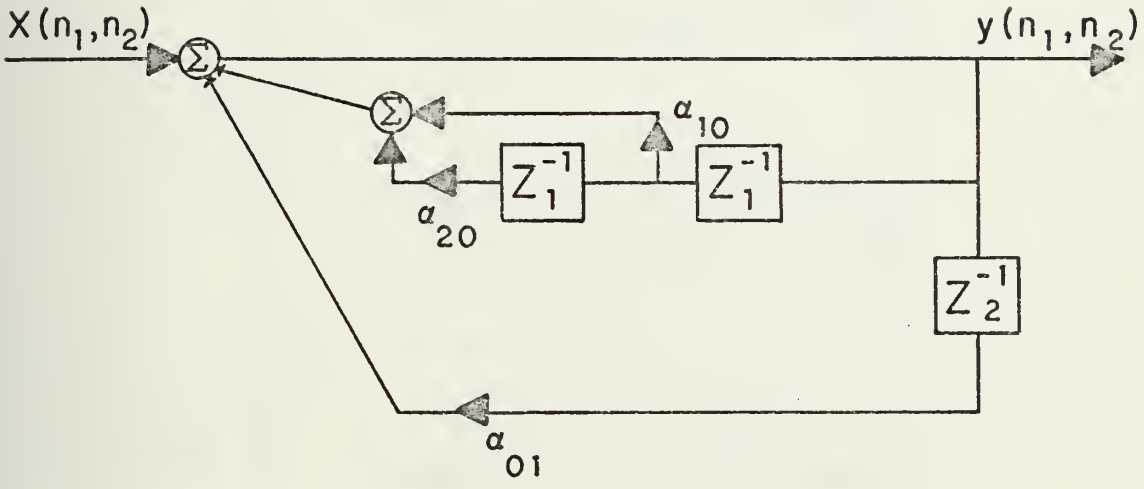

Fig. 5.1: DIRECT FORM REALIZATION OF THIRD ORDER UNCOUPLED FILTER IN TWO-DIMENSIONS.

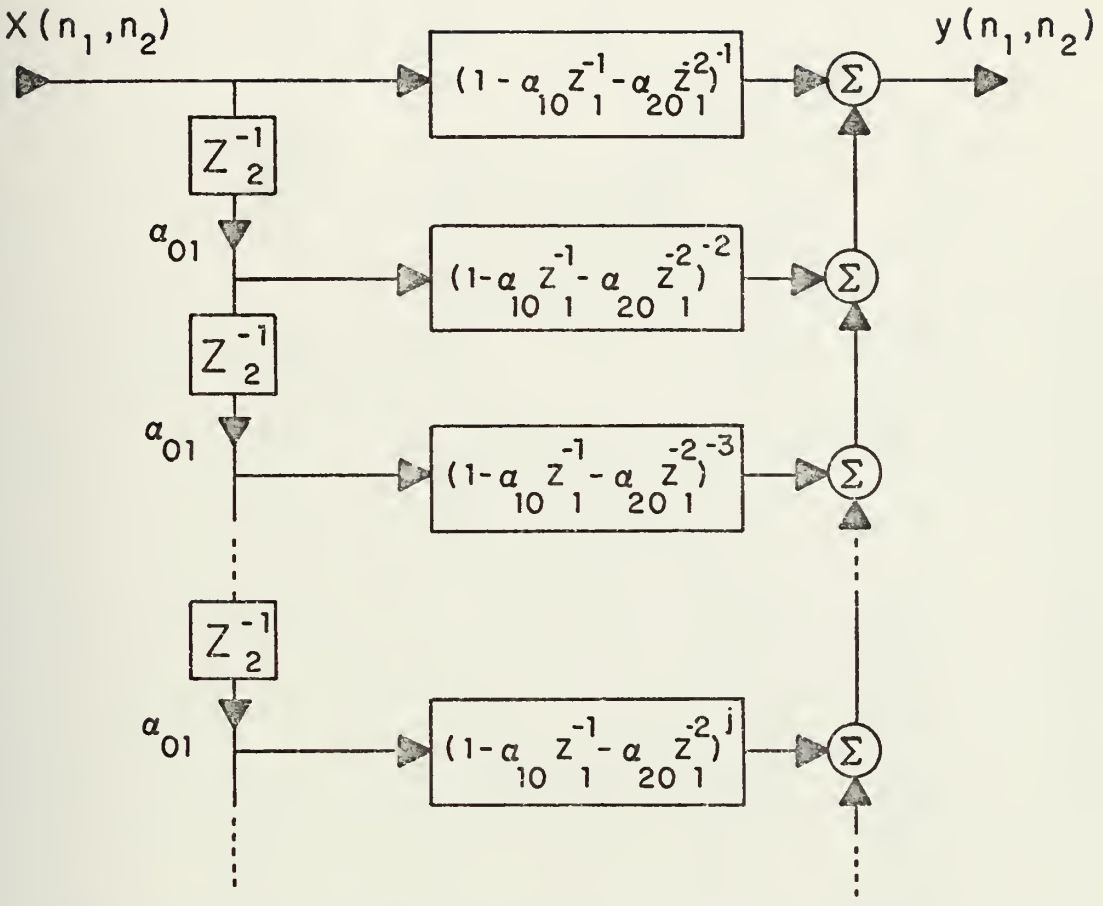

Fig. 5.2: HYBRID STRUCTURE OF THIRD-ORDER UNCOUPLED FILTER IN TWO-DIMENSIONS.

$n_1 = 0$	1	α_{01}	$\cdots$	α_{01}^{j}
1	α_{10}	$2\alpha_{10}\alpha_{01}$	$\cdots$	$(j+1)\,\alpha_{10}\alpha_{01}^{j}$
2	$\alpha_{10}^2 + \alpha_{20}$	$3\alpha_{10}^2\alpha_{01} + 2\alpha_{01}\alpha_{20}$	$\cdots$	$\frac{(j+1)(j+2)}{2!}\alpha_{10}^2\alpha_{01}^{j} + (j+1)\alpha_{01}^{j}\alpha_{20}$
3	$\alpha_{10}^3 + 2\alpha_{10}\alpha_{20}$	$4\alpha_{10}^3\alpha_{01} + 6\alpha_{10}\alpha_{01}\alpha_{20}$	$\cdots$	$\frac{(j+1)(j+2)(j+3)}{3!}\alpha_{10}^3\alpha_{01}^{j} + \frac{(j+1)(j+2)}{1!}\alpha_{10}\alpha_{01}^{j}\alpha_{20}$
4	$\alpha_{10}^4 + 3\alpha_{10}^2\alpha_{20} + \alpha_{20}^2$	$5\alpha_{10}^4\alpha_{01} + 12\alpha_{10}^2\alpha_{01}\alpha_{20} + 3\alpha_{01}\alpha_{20}^2$	$\cdots$	$\frac{(j+1)\cdots(j+4)}{4!}\alpha_{10}^4\alpha_{01}^{j} + \frac{(j+1)\cdots(j+2)}{2!}\alpha_{10}^2\alpha_{01}^{j}\alpha_{20} + \frac{(j+1)(j+2)}{1!}\alpha_{01}^{j}\alpha_{20}^2$
5	$\alpha_{10}^5 + 4\alpha_{10}^3\alpha_{20} + 3\alpha_{10}\alpha_{20}^2$	$6\alpha_{10}^5\alpha_{01} + 20\alpha_{10}^3\alpha_{01}\alpha_{20} + 12\alpha_{10}\alpha_{01}\alpha_{20}^2$	$\cdots$	$\frac{(j+1)\cdots(j+5)}{5!}\alpha_{10}^5\alpha_{01}^{j} + \frac{(j+1)\cdots(j+4)}{3!}\alpha_{10}^3\alpha_{01}^{j}\alpha_{20} + \frac{(j+1)\cdots(j+3)}{2!}\alpha_{10}\alpha_{01}^{j}\alpha_{20}^2$
$\vdots$	$\vdots$	$\vdots$		$\vdots$
k	$\sum_{m=0}^{[\frac{k}{2}]*} \frac{(k-m)!\,\alpha_{10}^{k-2m}\alpha_{20}^{m}}{m!\,(k-2m)!}$	$\sum_{m=0}^{[\frac{k}{2}]} \frac{(k-m+1)!\,\alpha_{10}^{k-2m}\alpha_{20}^{m}}{m!\,(k-2m)!}\alpha_{01}$	$\cdots$	$\sum_{m=0}^{[\frac{k}{2}]} \frac{(k-m+j)!\,\alpha_{10}^{k-2m}\alpha_{20}^{m}}{j!\,m!\,(k-2m)!}\alpha_{01}^{j}$

Table 5.2: Unit Pulse Response $\underline{A}$ of Third-Order Uncoupled Filter

* $[x]$ = largest integer $\leq x$

b. Summation of Absolute Entries of Unit Sample Response $\underline{A}$

The sum of all absolute entries of column 0

becomes:

$$S_0 = \sum_{n_1=0}^{\infty} |h(n_1,0)| \sum_{n_1=0}^{\infty} \left| \sum_{m=0}^{[n_1/2]} \frac{(n_1-m)!\ \alpha_{10}^{n_1-2m}\ \alpha_{20}^{m}}{m!\ (n_1-2m)!} \right| \tag{5.8}$$

Similarly,

$$S_1 = \sum_{n_1=0}^{\infty} \left| \sum_{m=0}^{[n_1/2]} \frac{(n_1-m+1)!\ \alpha_{10}^{n_1-2m}\ \alpha_{01}\ \alpha_{20}^{m}}{m!\ (n_1-2m)!} \right| \tag{5.9}$$

and for the j^{th} column

$$S_j = \sum_{n_1=0}^{\infty} \left| \sum_{m=0}^{[n_1/2]} \frac{(n_1-m+j)!\ \alpha_{10}^{n_1-2m}\ \alpha_{01}^{j}\ \alpha_{20}^{m}}{j!\ m!\ (n_1-2m)!} \right| \tag{5.10}$$

The sum of all absolute entries of the unit pulse response

$$S = \sum_{n_2=0}^{\infty} \sum_{n_1=0}^{\infty} |h(n_1,n_2)|$$

is now easily identified as:

$$S = \sum_{n_2=0}^{\infty} \sum_{n_1=0}^{\infty} \left| \sum_{m=0}^{[n_1/2]} \frac{(n_1+n_2-m)!\ \alpha_{10}^{n_1-2m}\ \alpha_{01}^{n_2}\ \alpha_{20}^{m}}{n_2!\ m!\ (n_1-2m)!} \right| \tag{5.11}$$

c. Necessary and Sufficient Stability Conditions for $\alpha_{20} \geq -\frac{\alpha_{10}^2}{4}$ using Ultraspherical Polynomial Method

It is proven in this section that the two-dimensional third order transfer function (5.6) is BIBO stable if and only if

$$\alpha_{20} < 1 - |\alpha_{10}| - |\alpha_{01}| \tag{5.12}$$

whenever $\alpha_{20} \geq -\frac{\alpha_{10}^2}{4}$ by inspection of eq (5.11) first for the case $\alpha_{20} \geq 0$ and secondly by utilizing the known characteristics of Ultraspherical polynomials.

(1) Stability Conditions for $\alpha_{20} \geq 0$. It is proven in Appendix C that a two-dimensional system is BIBO stable if and only if

$$S = \sum_{n_2=0}^{\infty} \sum_{n_1=0}^{\infty} |h(n_1,n_2)| < \infty \tag{5.13}$$

Equation (5.11) can be rewritten as:

$$S = \sum_{n_2=0}^{\infty} \sum_{n_1=0}^{\infty} \left| \alpha_{10}^{n_1} \alpha_{01}^{n_2} \sum_{m=0}^{[n_1/2]} \frac{(n_1+n_2-m)!}{n_2!\, m!\, (n_1-2m)!} \left(\frac{\alpha_{20}}{\alpha_{10}^2}\right)^m \right| \tag{5.14}$$

which for $\alpha_{20} \geq 0$, becomes

$$S = \sum_{n_2=0}^{\infty} \sum_{n_1=0}^{\infty} |\alpha_{10}^{n_1}||\alpha_{01}^{n_2}| \sum_{m=0}^{[n_1/2]} \frac{(n_1+n_2-m)!}{n_2!\ m!\ (n_1-2m)!} \left(\frac{\alpha_{20}}{\alpha_{10}^2}\right)^m \qquad (5.15a)$$

since α_{10} and α_{01} are real numbers.

The summation of all entries of $<\underline{\bar{A}}>$, where $<\ >$ is defined as taking the absolute value of each entry, i.e., the $(n_1,n_2)^{th}$ term; using eq (5.15a) is

$$|h(n_1,n_2)| = |\alpha_{10}|^{n_1}|\alpha_{01}|^{n_2} \sum_{m=0}^{[n_1/2]} \frac{(n_1+n_2-m)!}{n_2!\ m!\ (n_1-2m)!} \left(\frac{\alpha_{20}}{\alpha_{10}^2}\right)^m \qquad (5.15b)$$

is performed following Cauchy's third method of summing all entries of an infinite by infinite matrix. (See Appendix K). With the detailed computation contained in Appendix I, it is noted that the sum of successive diagonals of $<\underline{\bar{A}}>$ is greatly simplified by application of the binomial theorem and derivative operator methods.

The summation of all entries of $\underline{\bar{A}}$ converges or equivalently the third order filter transfer function $H(z_1,z_2)$ is stable if and only if

$$\alpha_{20} < 1 - |\alpha_{10}| - |\alpha_{01}| \qquad \text{for} \quad \alpha_{20} \geq 0 . \qquad (5.16)$$

Notice that the validity of eq (5.16) is easily checked by inspecting the unit sample response matrix $\underline{\bar{A}}$ as shown in Table 5.2.

(2) Stability Conditions for $0 > \alpha_{20} \geq -\frac{\alpha_{10}^2}{4}$

It is shown in this paragraph that eq (5.14) can be rewritten for $\alpha_{20} < 0$ such that the summation inside the absolute signs can be identified as an Ultraspherical polynomial. In order to simplify the summation of all absolute entries of $\underline{\bar{A}}$ by application of binomial and geometric series theory it is necessary to remove the absolute signs, which can be done utilizing the known characteristics of the Ultraspherical polynomials.

For $\alpha_{20} < 0$, eq (5.11) can be rewritten (5.17) in the following form:

$$S = \sum_{n_2=0}^{\infty} \sum_{n_1=0}^{\infty} \left| (\sqrt{-\alpha_{20}})^{n_1} \alpha_{01}^{n_2} \sum_{m=0}^{[n_1/2]} (-1)^m \frac{(n_1+n_2-m)!}{m!\, n_2!\, (n_1-2m)!} \left(\frac{\alpha_{10}}{\sqrt{-\alpha_{20}}} \right)^{n_1-2m} \right| \tag{5.18}$$

But the summation inside the absolute sign is identified using the theory presented in Appendix D, as Ultraspherical polynomial, i.e.,

$$C_{n_1}^{(n_2+1)} \left(\frac{\alpha_{10}}{2\sqrt{-\alpha_{20}}} \right) = \sum_{m=0}^{[n_1/2]} (-1)^m \frac{(n_1+n_2-m)!}{m!\, n_2!\, (n_1-2m)!} \left(\frac{\alpha_{10}}{\sqrt{-\alpha_{20}}} \right)^{n_1-2m} \tag{5.19}$$

It is proven in Appendix D that the Ultraspherical polynomial

$$C_{n_1}^{(n_2+1)}\left(\frac{\alpha_{10}}{2\sqrt{-\alpha_{20}}}\right) \quad \text{is positive,}$$

whenever

$$\left(\frac{\alpha_{10}}{2\sqrt{-\alpha_{20}}}\right) > 1 \,, \tag{5.20}$$

which implies $\alpha_{10} > 0$. Therefore, eq (5.18) can be rewritten as

$$S = \sum_{n_2=0}^{\infty} \sum_{n_1=0}^{\infty} \left(\sqrt{-\alpha_{20}}\right)^{n_1} |\alpha_{01}|^{n_2} C_{n_1}^{(n_2+1)}\left(\frac{\alpha_{10}}{2\sqrt{-\alpha_{20}}}\right) \tag{5.21}$$

Also, for

$$\left(\frac{\alpha_{10}}{2\sqrt{-\alpha_{20}}}\right) < -1 \tag{5.22}$$

it is proven in Appendix D that

$$C_{n_1}^{(n_2+1)}\left(\frac{\alpha_{10}}{2\sqrt{-\alpha_{20}}}\right)$$

is positive/negative whenever n_1 is even/odd, respectively. Thus in this case, the absolute value of the Ultraspherical polynomial becomes equal to

$$\left| C_{n_1}^{(n_2+1)} \left(\frac{\alpha_{10}}{2\sqrt{-\alpha_{20}}} \right) \right| = (-1)^{n_1} \, C_{n_1}^{(n_2+1)} \left(\frac{\alpha_{10}}{2\sqrt{-\alpha_{20}}} \right) \qquad (5.23)$$

It is also proven in Appendix D that the right hand side of eq (5.23) is equal to

$$= C_{n_1}^{(n_2+1)} \left(\frac{-\alpha_{10}}{2\sqrt{-\alpha_{20}}} \right) \qquad (5.24)$$

Condition

$$\left(\frac{\alpha_{10}}{2\sqrt{-\alpha_{20}}} \right) < -1 \qquad (5.25)$$

implies $\alpha_{10} < 0$. Thus

$$C_{n_1}^{(n_2+1)} \left(\frac{-\alpha_{10}}{2\sqrt{-\alpha_{20}}} \right) = C_{n_1}^{(n_2+1)} \left(\frac{|\alpha_{10}|}{2\sqrt{-\alpha_{20}}} \right)$$

and

$$S = \sum_{n_2=0}^{\infty} \sum_{n_1=0}^{\infty} (\sqrt{-\alpha_{20}})^{n_1} \, |\alpha_{01}|^{n_2} \, C_{n_1}^{(n_2+1)} \left(\frac{|\alpha_{10}|}{2\sqrt{-\alpha_{20}}} \right) \qquad (5.26)$$

Conditions (5.17), (5.20) and (5.25) are now combined as

$$0 > \alpha_{20} \geq -\frac{\alpha_{10}^2}{4} \tag{5.27}$$

and similarly, eqs (5.21) and (5.26) to

$$S = \sum_{n_2=0}^{\infty} \sum_{n_1=0}^{\infty} (\sqrt{-\alpha_{20}})^{n_1} |\alpha_{01}|^{n_2} C_{n_1}^{(n_2+1)} \left(\frac{|\alpha_{10}|}{2\sqrt{-\alpha_{20}}}\right)$$

which by eq (5.19) is equal to

$$S = \sum_{n_2=0}^{\infty} \sum_{n_1=0}^{\infty} |\alpha_{10}|^{n_1} |\alpha_{01}|^{n_2} \sum_{m=0}^{[n_1/2]} \frac{(n_1+n_2-m)!}{n_2!\, m!\, (n_1-2m)!} \left(\frac{\alpha_{20}}{\alpha_{10}^2}\right)^m \tag{5.28}$$

which is identical to eq (5.15). Therefore, it is concluded that $H(z_1,z_2)$ as defined in eq (5.6) is stable if and only if

$$\alpha_{20} < 1 - |\alpha_{10}| - |\alpha_{01}| \tag{5.29}$$

for

$$0 > \alpha_{20} \geq -\frac{\alpha_{10}^2}{4} \tag{5.30}$$

d. Sufficient Stability Conditions for $\alpha_{20} < -\frac{\alpha_{10}^2}{4}$

It is proven in this section that the third order uncoupled transfer function is stable if

$$|\alpha_{01}| < (1 - \sqrt{-\alpha_{20}})^2 \qquad \text{for} \qquad \alpha_{20} < -\frac{\alpha_{10}^2}{4} \qquad (5.31)$$

by using the known characteristics of Ultraspherical polynomial. For

$$\alpha_{20} < -\frac{\alpha_{10}^2}{4} \quad ,$$

which is the condition for complex roots of the one-dimensional second order transfer function:

$$H(z_1) = \frac{1}{1 - \alpha_1 z_1^{-1} - \alpha_2 z_1^{-2}}$$

it is shown in Appendix D that the Ultraspherical polynomial

$$C_{n_1}^{(n_2+1)}\left(\frac{\alpha_{10}}{2\sqrt{-\alpha_{20}}}\right)$$

has n_1 real and distinct roots. This implies that the sum of all absolute entries of $\underline{\underline{A}}$ must be performed without removal of the absolute signs enclosing the Ultraspherical polynomial part in:

$$S = \sum_{n_2=0}^{\infty} \sum_{n_1=0}^{\infty} (\sqrt{-\alpha_{20}})^{n_1} |\alpha_{01}|^{n_2} \left| C_{n_1}^{(n_2+1)} \left(\frac{\alpha_{10}}{2\sqrt{-\alpha_{20}}} \right) \right| , \qquad (5.32)$$

If we apply Cauchy's first method of summing all entries of an infinite by infinite matrix (See Appendix K) then the sum of all entries in column 0 becomes

$$S_0 = \sum_{n_1=0}^{\infty} (\sqrt{-\alpha_{20}})^{n_1} \left| C_{n_1}^{(1)} \left(\frac{\alpha_{10}}{2\sqrt{-\alpha_{20}}} \right) \right| \qquad (5.33)$$

It is obvious from Fig D.1 of Appendix D that there exists no range of $\left(\frac{\alpha_{10}}{2\sqrt{-\alpha_{20}}} \right)$ where all $C_{n_1}^{(1)}$ are of same sign. Therefore, an approximation from Ref [55] is used, i.e.,

$$\left| C_{n_1}^{(n_2+1)} \left(\frac{\alpha_{10}}{2\sqrt{-\alpha_{20}}} \right) \right| \leq \binom{n_1+2n_2+1}{n_1} \qquad (5.34)$$

Thus

$$S_0 \leq \sum_{n_1=0}^{\infty} (\sqrt{-\alpha_{20}})^{n_1} \binom{n_1+1}{n_1} =$$

$$= \frac{d}{d\sqrt{-\alpha_{20}}} \left(\frac{\sqrt{-\alpha_{20}}}{1 - \sqrt{-\alpha_{20}}} \right) \qquad (5.35)$$

if and only if $|\sqrt{-\alpha_{20}}| < 1$

$$= \left(\frac{1}{1 - \sqrt{-\alpha_{20}}}\right)^2$$

By similar computations, S_j becomes:

$$S_j \leq \frac{|\alpha_{01}|^j}{(1 - \sqrt{-\alpha_{20}})^{2j+2}}$$

and

$$S = \sum_{j=0}^{\infty} S_j \leq \frac{1}{(1 - \sqrt{-\alpha_{20}})^2} \sum_{j=0}^{\infty} \left(\frac{|\alpha_{01}|}{(1 - \sqrt{-\alpha_{20}})^2}\right)^j \qquad (5.36)$$

which converges, if and only if

$$|\alpha_{01}| < (1 - \sqrt{-\alpha_{20}})^2 \qquad \text{q.e.d.}$$

e. Improved Sufficient Stability Conditions for $\alpha_{20} < -\frac{\alpha_{10}^2}{4}$

It is proven in Appendix I that a two-dimensional third order (uncoupled) transfer function is stable if

$$|\alpha_{01}| \leq \frac{\sin\theta \cdot \sqrt{-\alpha_{20}}[\,\theta^2 + \ln^2 \sqrt{-\alpha_{20}}\,]\,[1 - \sqrt{-\alpha_{20}}^{\frac{\pi}{\theta}}]}{c \cdot \theta\,[1 + \sqrt{-\alpha_{20}}^{\frac{\pi}{\theta}}]} \qquad (5.37)$$

where $\theta = \arccos\left(\frac{\alpha_{10}}{2\sqrt{-\alpha_{20}}}\right)$, $c = 1.11$ (5.38)

and $\alpha_{20} < -\frac{\alpha_{10}^2}{4}$ (5.39)

Equation (5.37) is an exceptionally good approximation for the Ultraspherical polynomial in the domain:

$$\left| \frac{\alpha_{10}}{2\sqrt{-\alpha_{20}}} \right| < 1 \tag{5.40}$$

The resulting condition (5.37) has exhibited, in a large number of tests, excellent agreement with experimental results.

The stability conditions for the third order transfer function in two-dimensions are summarized as follows:

$$H(z_1,z_2) = \frac{1}{1 - \alpha_{10}z_1^{-1} - \alpha_{01}z_2^{-1} - \alpha_{20}z_1^{-2}}$$

represents a stable algorithm, when $\alpha_{20} \geq -\frac{\alpha_{10}^2}{4}$ if and only if

$$\alpha_{20} < 1 - |\alpha_{10}| - |\alpha_{01}|$$

when $\alpha_{20} < -\frac{\alpha_{10}^2}{4}$ it is sufficient that

$$|\alpha_{01}| < (1 - \sqrt{-\alpha_{20}})^2$$

or alternatively

$$|\alpha_{01}| \leq \frac{\sin\theta \sqrt{-\alpha_{20}} \left[\theta^2 + \ln^2\sqrt{-\alpha_{20}}\right]\left[1 - \sqrt{-\alpha_{20}}^{\frac{\pi}{\theta}}\right]}{c\ \theta\ (1 + \sqrt{-\alpha_{20}}^{\frac{\pi}{\theta}})}$$

where $\theta = \arccos\left(\frac{\alpha_{10}}{2\sqrt{-\alpha_{20}}}\right)$ and $c = 1.11$

2. Fourth-Order Transfer Function

For $g(z_1)$ as defined in eq (5.4) and

$$h(z_2) = \alpha_{01} z_2^{-1} + \alpha_{02} z_2^{-2}$$

equations (5.2), (5.3) become

$$H(z_1,z_2) = \frac{1}{1 - \alpha_{10} z_1^{-1} - \alpha_{01} z_2^{-1} - \alpha_{20} z_1^{-2} - \alpha_{02} z_2^{-2}} \quad , \text{ and} \qquad (5.41)$$

$$= \sum_{p=0}^{\infty} [\alpha_{01} z_2^{-1} + \alpha_{02} z_2^{-2}]^{p} [1 - \alpha_{10} z_1^{-1} - \alpha_{10} z_1^{-2}]^{-p-1} \qquad (5.42)$$

Equation (5.41) is realized recursively in direct forms 3 and 4, as shown in Fig 5.3. A hybrid structure realizing eq (5.42) is shown in Fig 5.4.

a. Unit Sample Response

The unit sample response is computed in Appendix I for the fourth-order filter in two dimensions using the same approach as in paragraph 2a. The result is listed in Tables 5.3 and 5.4.

b. Summation of Absolute Entries of Unit Sample Response $\underline{A}$

The sum of all absolute entries of Tables 5.3 and 5.4 will be obtained using Cauchy's first and second method, i.e.,

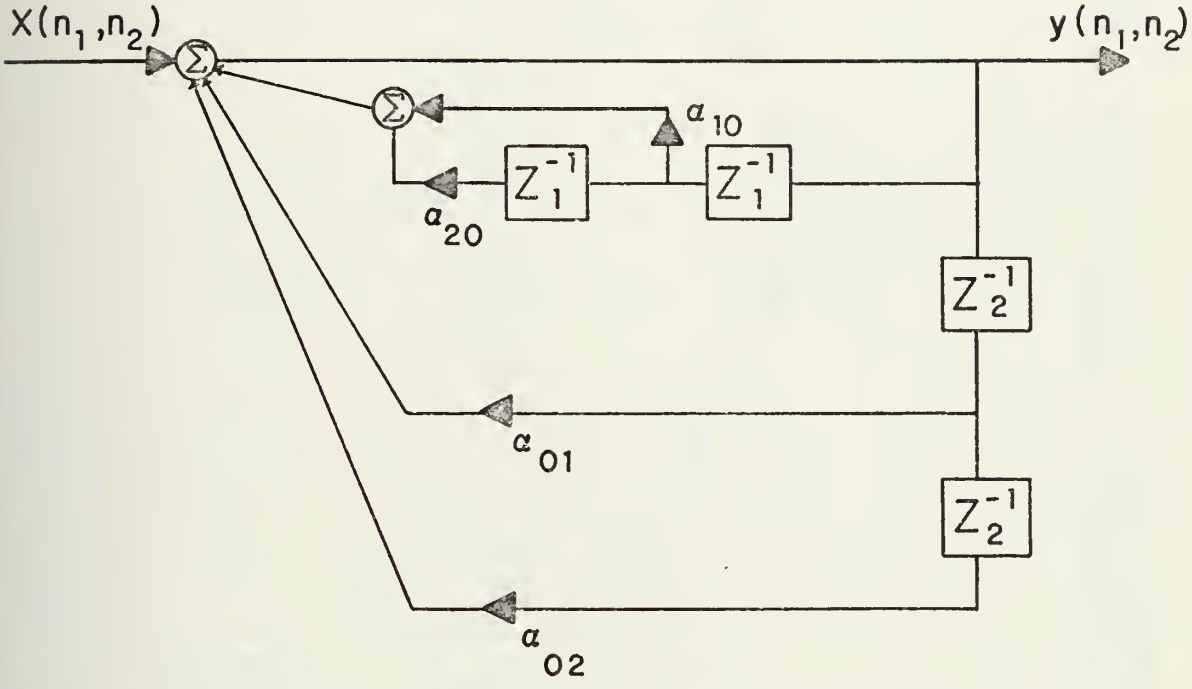

Fig. 5.3: DIRECT FORM REALIZATION OF FOURTH-ORDER (UNCOUPLED) FILTER IN TWO-DIMENSIONS.

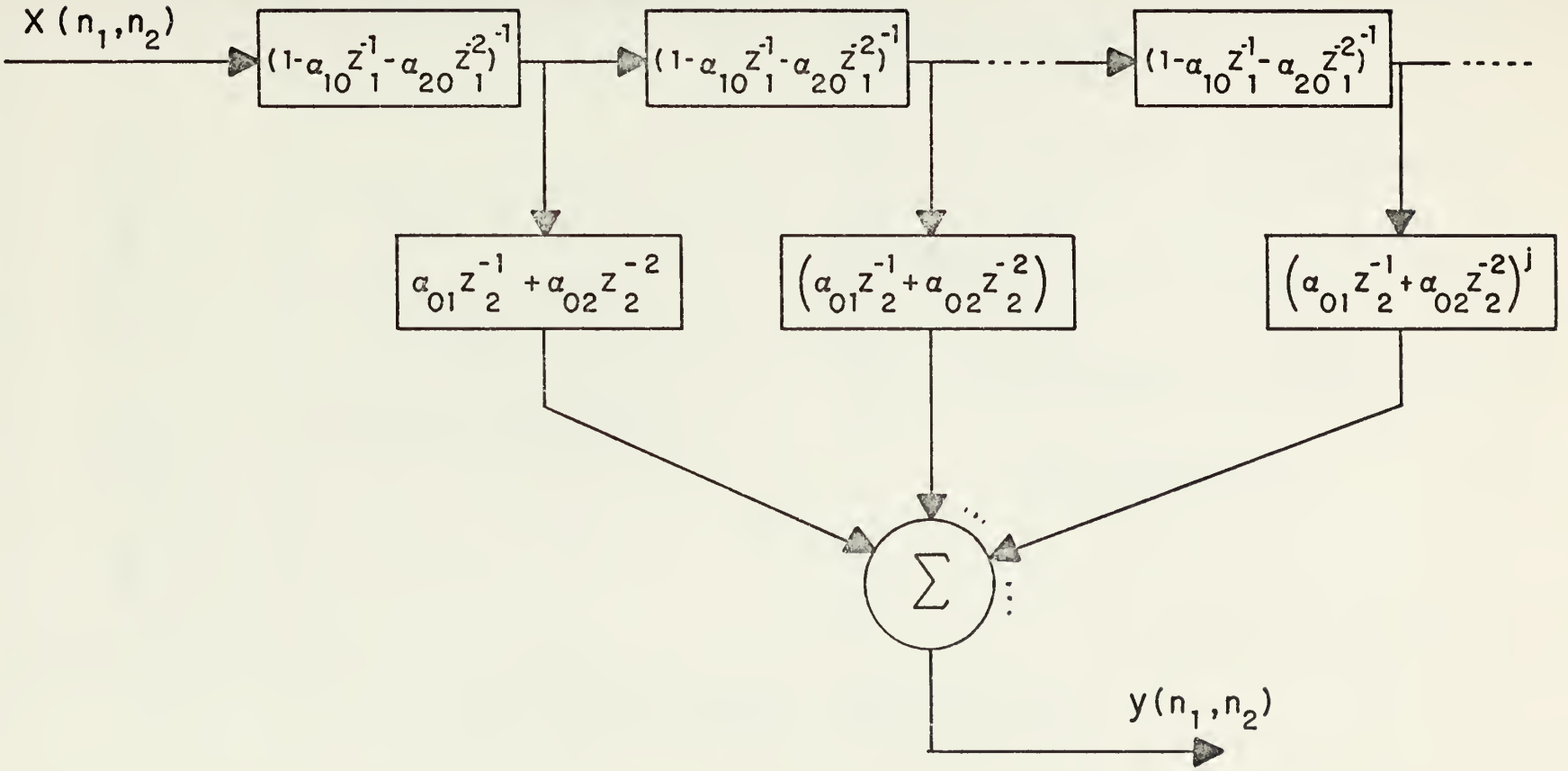

Fig. 5.4: HYBRID STRUCTURE OF FOURTH ORDER UNCOUPLED FILTER IN TWO-DIMENSIONS.

	$n_2 = 0, 1$	$n_2 = 2$	...	$n_2 = j$
$n_1 = 0$	For $n_2 = 0, 1$ see Table 5.2	$d_{01}^2 + d_{02}$	...	$\sum_{m=0}^{[j/2]} \frac{(j-m)!\, d_{01}^{j-2m}\, d_{02}^{m}}{m!\,(j-2m)!}$
$n_1 = 1$		$3d_{10}d_{01}^2 + 2d_{10}d_{02}$	...	$\sum_{m=0}^{[j/2]} \frac{(j-m+1)!\, d_{01}^{j-2m}\, d_{02}^{m}\, d_{10}}{m!\,(j-2m)!}$
$n_1 = 2$		$6d_{10}^2 d_{01}^2 + 3d_{10}^2 d_{02} + 3d_{01}^2 d_{20} + 2d_{20}d_{02}$	...	$\sum_{m=0}^{[j/2]} \left\{ \frac{(j-m+2)!\, d_{01}^{j-2m}\, d_{10}^2\, d_{02}^{m}}{2!\,m!\,(j-2m)!} + \frac{(j-m+1)!\, d_{01}^{j-2m}}{1!\,(j-2m)!\,m!} d_{02}^{m}\, d_{20} \right\}$
$n_1 = 3$		$10 d_{10}^3 d_{01}^2 + 4 d_{10}^3 d_{02} + 12 d_{10} d_{01}^2 d_{20} + 6 d_{10} d_{20} d_{02}$	...	$\sum_{m=0}^{[j/2]} \left\{ \frac{(j-m+3)!\, d_{01}^{j-2m}\, d_{10}^3\, d_{02}^{m}}{3!\,m!\,(j-2m)!} + \frac{(j-m+2)!\, d_{01}^{j-2m}}{2!\,(j-2m)!\,m!} d_{02}^{m}\, d_{10} d_{20} \right\}$
$n_1 = 4$		$15 d_{10}^4 d_{01}^2 + 5 d_{10}^4 d_{02} + 30 d_{10}^2 d_{01}^2 d_{20} + 12 d_{10}^2 d_{20} d_{02} + 6 d_{01}^2 d_{20}^2 + 3 d_{20}^2 d_{02}$	...	$\sum_{m=0}^{[j/2]} \left\{ \frac{(j-m+4)!\, d_{01}^{j-2m}\, d_{10}^4\, d_{02}^{m}}{4!\,m!\,(j-2m)!} + 3 \frac{(j-m+3)!\, d_{01}^{j-2m}}{3!\,(j-2m)!\,m!} d_{02}^{m}\, d_{10}^2\, d_{20} + \frac{(j-m+2)\, d_{01}^{j-2m}}{2!\,(j-2m)\,m!} d_{02}^{m}\, d_{20}^2 \right\}$
$n_1 = k$	For $n_1 = k$ entries see Table 5.4			

TABLE 5.3: UNIT PULSE RESPONSE $\underline{A}$ OF FOURTH ORDER UNCOUPLED FILTER

$n_2 =$	$h(k,n_2)$
0	$\sum_{i=0}^{[k/2]} \frac{(k-i)!\ \alpha_{20}^{k-2i}\ \alpha_{20}^{i}}{i!\ (k-2i)!}$
1	$\sum_{i=0}^{[k/2]} \frac{(k-i+1)!\ \alpha_{10}^{k-2i}\ \alpha_{20}^{i}\ \alpha_{01}}{i!\ (k-2i)!\ 1!}$
2	$\sum_{i=0}^{[k/2]} \frac{(k-i+2)!\ \alpha_{10}^{k-2i}\ \alpha_{20}^{i}\ \alpha_{01}^{2}}{i!\ (k-2i)!\ 2!} + \frac{(k-i+1)!\ \alpha_{20}^{k-2i}\ \alpha_{20}^{i}\ \alpha_{02}}{i!\ (k-2i)!\ 1!}$
. . .	. . .
j	$\sum_{i=0}^{[k/2]} \frac{\alpha_{10}^{k-2i}\ \alpha_{20}^{i}}{i!\ (k-2i)!} \sum_{m=0}^{[j/2]} \frac{(j-m+k-i)!\ \alpha_{01}^{j-2m}\ \alpha_{02}^{m}}{m!\ (j-2m)!}$

TABLE 5.4: $n_1 = k$ ENTRIES OF UNIT SAMPLE RESPONSE CORRESPONDING TO FOURTH ORDER UNCOUPLED TRANSFER FUNCTION

Summation by columns:

$$S^c = \sum_{n_2=0}^{\infty} \sum_{n_1=0}^{\infty} \left| \sum_{i=0}^{[n_1/2]} \left\{ \frac{\alpha_{10}^{n_1-2i} \; \alpha_{20}^{i}}{i!\,(n_1-2i)!} \sum_{m=0}^{[n_2/2]} \frac{(n_1+n_2-m-i)!\,\alpha_{01}^{n_2-2m} \; \alpha_{02}^{m}}{m!\,(n_2-2m)!} \right\} \right| \tag{5.44}$$

Summation by rows, respectively:

$$S^r = \sum_{n_1=0}^{\infty} \sum_{n_2=0}^{\infty} \left| \sum_{m=0}^{[n_2/2]} \left\{ \frac{\alpha_{01}^{n_2-2m} \; \alpha_{02}^{m}}{m!\,(n_2-2m)!} \sum_{i=0}^{[n_1/2]} \frac{(n_1+n_2-m-i)!\,\alpha_{10}^{n_1-2i} \; \alpha_{20}^{i}}{i!\,(n_1-2i)!} \right\} \right| \tag{5.45}$$

(1) Necessary and Sufficient Stability Conditions

It is proven in Appendix I that the fourth order uncoupled transfer function is stable for $\alpha_{20} \geq 0$ and $\alpha_{02} \geq 0$, i.e.,

$$S^c = \sum_{n_2=0}^{\infty} \sum_{n_1=0}^{\infty} |\alpha_{10}|^{n_1} |\alpha_{01}|^{n_2} \sum_{i=0}^{[n_1/2]} \left\{ \frac{\left(\frac{\alpha_{20}}{\alpha_{10}^2}\right)^i}{i!\,(n_1-2i)!} \sum_{m=0}^{[n_2/2]} \frac{(n_1+n_2-m-i)!}{m!\,(n_2-2m)!} \left(\frac{\alpha_{02}}{\alpha_{01}^2}\right)^m \right\} \tag{5.46}$$

is finite, if and only if

$$\alpha_{20} + \alpha_{02} < 1 - |\alpha_{10}| - |\alpha_{01}| \tag{5.47}$$

In the case where $0 > \alpha_{02} > -\frac{\alpha_{01}^2}{4}$ and $\alpha_{20} \geq 0$ the summation of columns S^c is written in the following form

$$S^c = \sum_{n_2=0}^{\infty} \sum_{n_1=0}^{\infty} \left| \sum_{i=0}^{[n_1/2]} \left\{ \frac{\alpha_{10}^{n_1-2i} \; \alpha_{20}^{i} \; (n_1-i)!}{i! \; (n_1-2i)!} \left(\sqrt{-\alpha_{02}}\right)^{n_2} \right.\right.$$

$$\left.\left. \left[\frac{1}{(n_1-i)!} \sum_{m=0}^{[n_2/2]} (-1)^m \frac{(n_1+n_2-m-i)!}{m! \; (n_2-2m)!} \left(\frac{\alpha_{01}}{\sqrt{-\alpha_{02}}}\right)^{n_2-2m} \right] \right\} \right|$$

But the term in the square bracket defines the Ultraspherical polynomial of the $(n_1-i+1)^{st}$ order, i.e.,

$$\frac{1}{(n_1-i)!} \sum_{m=0}^{[n_2/2]} (-1)^m \frac{(n_1+n_2-m-i)!}{m! \; (n_2-2m)!} \left(\frac{\alpha_{01}}{\sqrt{-\alpha_{02}}}\right)^{n_2-2m} = C_{n_2}^{(n_1-i+1)} \left(\frac{\alpha_{01}}{2\sqrt{-\alpha_{02}}}\right) \tag{5.48}$$

and

$$S^c = \sum_{n_2=0}^{\infty} \sum_{n_1=0}^{\infty} \left| \sum_{i=0}^{[n_1/2]} \left\{ \frac{\alpha_{10}^{n_1-2i} \; \alpha_{20}^{i} \; (n_1-i)!}{i! \; (n_1-2i)!} \left(\sqrt{-\alpha_{02}}\right)^{n_2} C_{n_2}^{(n_1-i+1)} \left(\frac{\alpha_{01}}{2\sqrt{-\alpha_{02}}}\right) \right\} \right|$$

It is proven in Appendix D that the Ultraspherical polynomial as defined by eq (5.48) is positive for

$$\left(\frac{\alpha_{01}}{2\sqrt{-\alpha_{02}}}\right) > 1 \tag{5.49}$$

and positive/negative for

$$\left(\frac{\alpha_{01}}{2\sqrt{-\alpha_{02}}}\right) < -1 \tag{5.50}$$

for even/odd n_2 respectively.

Following the same reasoning as in the previous section, it can be shown that for $\alpha_{20} \geq 0$,

$$C_{n_2}^{(n_1-i+1)} \left(\frac{|\alpha_{01}|}{2\sqrt{-\alpha_{02}}}\right) > 0 \tag{5.51}$$

whenever

$$0 > \alpha_{02} \geq -\frac{\alpha_{01}^2}{4} \tag{5.52}$$

Similarly it can be shown that the summation of all entries of $\langle \underline{\bar{A}} \rangle$ by rows, i.e.,

$$S^r = \sum_{n_1=0}^{\infty} \sum_{n_2=0}^{\infty} \left| \sum_{m=0}^{[n_2/2]} \left\{ \frac{\alpha_{01}^{n_2-2m}}{m!\,(n_2-2m)!} \alpha_{02}^{m} \sum_{i=0}^{[n_1/2]} \frac{(n_1+n_2-m-i)!}{i!\,(n_1-2i)!} \alpha_{10}^{n_1-2i} \alpha_{20}^{i} \right\} \right|$$

equals, for $\alpha_{20} < 0$,

$$S^r = \sum_{n_1=0}^{\infty} \sum_{n_2=0}^{\infty} \left| \sum_{m=0}^{[n_2/2]} \frac{\alpha_{01}^{n_2-2m} \alpha_{02}^{m}}{m!\,(n_2-2m)!} (n_2-m)! \left(\sqrt{-\alpha_{20}}\right)^{n_1} C_{n_1}^{(n_2-m+1)} \left(\frac{\alpha_{10}}{2\sqrt{-\alpha_{20}}}\right) \right| \tag{5.53}$$

and that

$$C_{n_1}^{(n_2-m+1)} \left(\frac{|\alpha_{10}|}{2\sqrt{-\alpha_{20}}}\right) > 0$$

for

$$0 > \alpha_{20} \geq -\frac{\alpha_{10}^2}{4} \quad .$$

In summary, for the conditions

$$\alpha_{20} \geq 0 \quad \text{and} \quad 0 > \alpha_{02} \geq -\frac{\alpha_{01}^2}{4} \tag{5.54}$$

$$\alpha_{02} \geq 0 \quad \text{and} \quad 0 > \alpha_{20} \geq -\frac{\alpha_{10}^2}{4} \tag{5.55}$$

which are shown in Fig 5.5, the column series S^c as defined by eq (5.44) can be written in the form

$$S^c = \sum_{n_2=0}^{\infty} \sum_{n_1=0}^{\infty} |\alpha_{10}|^{n_1} |\alpha_{01}|^{n_2} \sum_{i=0}^{[n_1/2]} \left\{ \frac{\left(\frac{\alpha_{20}}{\alpha_{10}^2}\right)^i}{i!\,(n_1-2i)!} \right.$$

$$\left. \cdot \sum_{m=0}^{[n_2/2]} \frac{(n_1+n_2-m-i)!}{m!\,(n_2-2m)!} \left(\frac{\alpha_{02}}{\alpha_{01}^2}\right)^m \right\} \tag{5.56}$$

which is identical to eq (5.46) and for which the conditions for convergence are as stated in eq (5.47).

(2) Sufficient Stability Conditions

For conditions:

$$0 > \alpha_{20} \geq -\frac{\alpha_{10}^2}{4} \quad \text{and} \quad 0 > \alpha_{02} \geq -\frac{\alpha_{01}^2}{4} \tag{5.57}$$

and for

$$\alpha_{20} < -\frac{\alpha_{10}^2}{4} \quad \text{and/or} \quad \alpha_{02} < -\frac{\alpha_{01}^2}{4} \tag{5.58}$$

which are also shown in Fig 5.5, the triangle inequality is applied to

$$S^c = \sum_{n_2=0}^{\infty} \sum_{n_1=0}^{\infty} \left| \sum_{i=0}^{[n_1/2]} \left\{ \frac{\alpha_{10}^{n_1-2i} \; \alpha_{20}^{i}}{i!\,(n_1-2i)!} \sum_{m=0}^{[n_2/2]} \frac{(n_1+n_2-m-i)!\; \alpha_{01}^{n_2-2m} \; \alpha_{02}^{m}}{m!\,(n_2-2m)!} \right\} \right|$$

such that

$$S^c = \sum_{n_2=0}^{\infty} \sum_{n_1=0}^{\infty} \sum_{i=0}^{[n_1/2]} \frac{|\alpha_{10}|^{n_1} \left(\frac{|\alpha_{20}|}{\alpha_{10}^2}\right)^{i}}{i!\,(n-2i)!} \sum_{m=0}^{[n_2/2]} \frac{(n_1+n_2-m-i)!\,|\alpha_{01}|^{n_1} \left(\frac{|\alpha_{02}|}{\alpha_{10}^2}\right)^{m}}{m!\,(n_2-2m)!} \tag{5.59}$$

It is easily observed from the derivation leading to necessary and sufficient stability conditions, that the conditions for convergence of eq (5.59) must be

$$|\alpha_{20}| + |\alpha_{02}| < 1 - |\alpha_{10}| - |\alpha_{01}|. \tag{5.60}$$

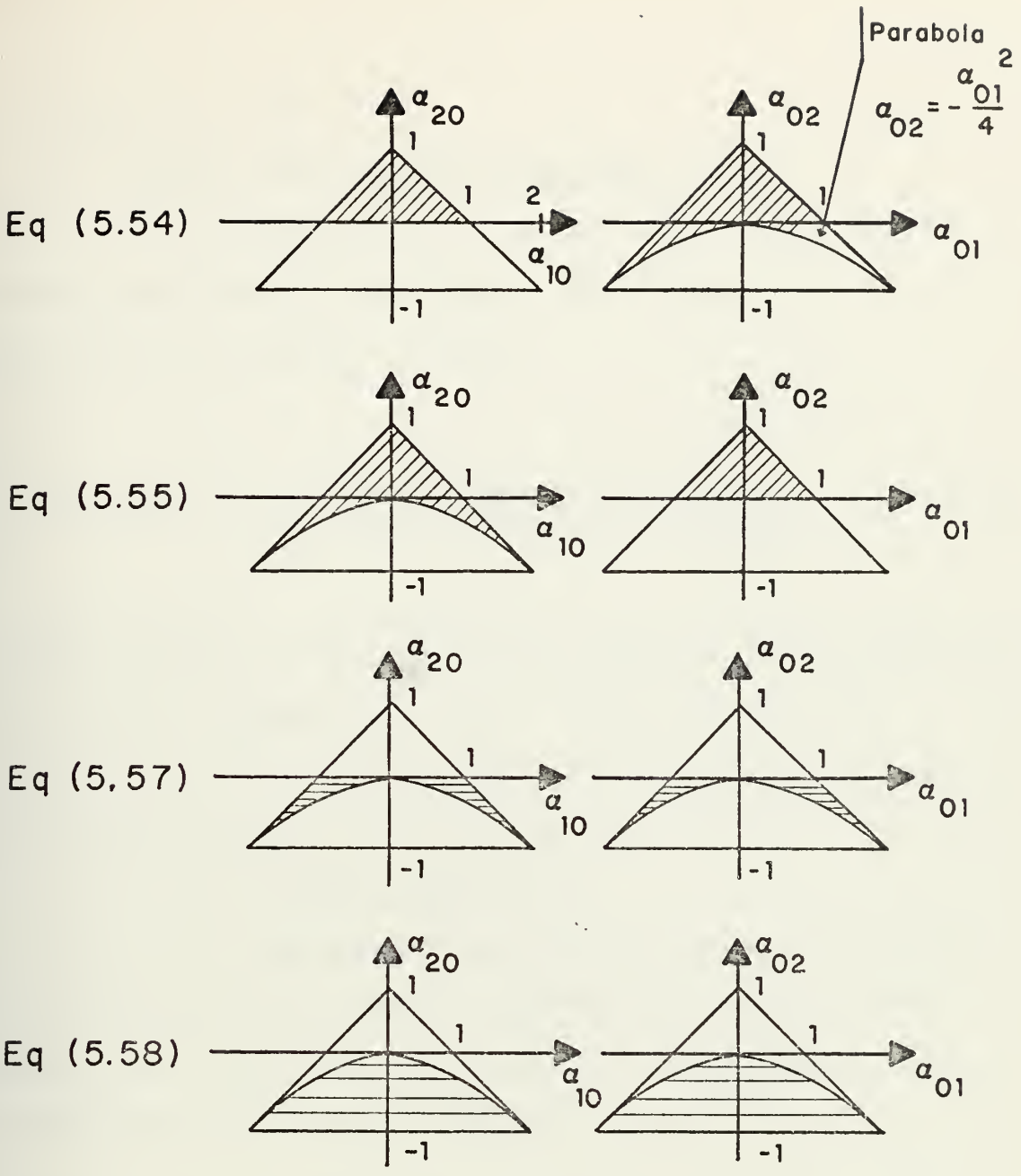

Fig. 5.5: GRAPHICAL INTERPRETATION OF INEQUALITIES (5.54, 55, 57, 58).

C. COUPLED FILTER

1. Second Order Coupled (Bilinear) Filter

The transfer function of the second-order coupled filter, which is also referred to as bilinear case in Refs [13] and [24] has the form:

$$H(z_1,z_2) = \frac{1}{1 - \alpha_{10}z_1^{-1} - \alpha_{01}z_2^{-1} - \alpha_{11}z_1^{-1}z_2^{-1}} \qquad (5.61)$$

Equation (5.61) can be realized in direct form as shown in Fig 5.6. It is noted that for a unity numerator the realization in Fig 5.6 represents all direct, as well as the canonic forms.

a. Unit Sample Response $\underline{\bar{A}}$

The unit sample response $\underline{\bar{A}}$, which is defined in Section D of the previous chapter, is computed using Theorem 4.1. The resulting matrix is listed in Table 5.5, in which the k^{th} entry of column 1, i.e.,

$$(k+1)\ \alpha_{10}^{k}\ \alpha_{01} + k\ \alpha_{10}^{k-1}\ \alpha_{11}$$

is rewritten as

$$\sum_{m=0}^{1} \frac{\alpha_{10}^{1-m}\ \alpha_{11}^{m}}{(1-m)!\ m!}\ \frac{d}{d\ \alpha_{10}}\left(\alpha_{10}^{k+1-m}\right)$$

where $\frac{d^k}{d\ \alpha_{10}^k}(\quad)$ stands for k^{th} derivative of ( ) .

Using the same notation, the j^{th} entry of the k^{th} row can be written as

$$\sum_{m=0}^{k} \frac{\alpha_{10}^{k-m}\,\alpha_{11}^{m}}{(k-m)!\;m!} \quad \frac{d^k}{d\,\alpha_{01}^{k}} \left(\alpha_{01}^{j+k-m}\right) \tag{5.62}$$

b. Sum of Absolute Entries of $\underline{\underline{A}}$

The sum of absolute entries of $\underline{\underline{A}}$ is equal to

$$S = \sum_{n_2=0}^{\infty} \sum_{n_1=0}^{\infty} \left| \sum_{m=0}^{n_2} \frac{\alpha_{10}^{n_2-m}\,\alpha_{11}^{m}}{(n_2-m)!\;m!} \quad \frac{d^{n_2}}{d\,\alpha_{01}^{n_2}} \alpha_{01}^{n_1+n_2-m} \right| \tag{5.63}$$

To identify convergency conditions of eq (5.63), both the conditions for convergence are found for each particular n_2 and $0 \leq n_1 \leq \infty$, and the sum S_{n_2} to which it converges, as well as the conditions for convergence of

$$\sum_{n_2=0}^{\infty} S_{n_2}$$

This approach follows Cauchy's second method of matrix summation. In particular, the sum of all entries in column 0 of $\{h(n_1,n_2)\}$ is shown in the corresponding section C of Appendix I to result for $\alpha_{10} \geq 0$ in

$$S_0 = \sum_{n_1=0}^{\infty} \alpha_{10}^{n_1}$$

which converges if $|\alpha_{10}| < 1$ to

$$S_0 = \frac{1}{1 - \alpha_{10}}$$

S_1, the sum of entries in column 1, is proven in Appendix K to equal, for $|\alpha_{10}| < 1$, to

$$S_1 \geq \frac{1}{1 - \alpha_{10}} \left| \frac{\alpha_{10}\alpha_{01} + \alpha_{11}}{1 - \alpha_{10}} + \alpha_{01} \right|$$

Following the same procedure, the S_j becomes

$$S_j \geq \frac{1}{1 - \alpha_{10}} \left| \left(\frac{\alpha_{10}\alpha_{01} + \alpha_{11}}{1 - \alpha_{10}} + \alpha_{01} \right)^j \right| \qquad (5.64)$$

But the sum of all absolute entries of $\underline{\bar{A}}$ is defined by

$$S = \sum_{n_2=0}^{\infty} S_{n_2}$$

which is now identified for $|\alpha_{10}| < 1$ to equal

$$S \geq \frac{1}{1 - \alpha_{10}} \sum_{n_2=0}^{\infty} \left| \left(\frac{\alpha_{10}\alpha_{01} + \alpha_{11}}{1 - \alpha_{10}} + \alpha_{01} \right)^{n_2} \right| \qquad (5.65)$$

But the right hand side of eq (5.65) converges if and only if

$$\left| \frac{\alpha_{10}\alpha_{01} + \alpha_{11}}{1 - \alpha_{10}} + \alpha_{01} \right| < 1$$

or

$$\left| \frac{\alpha_{01} + \alpha_{11}}{1 - \alpha_{10}} \right| < 1 \qquad (5.66)$$

2. Discussion

It will be shown in the next chapter that another necessary stability condition for the bilinear case is as follows:

$$\left| \frac{\alpha_{01} - \alpha_{11}}{1 + \alpha_{10}} \right| < 1 \qquad (5.67)$$

Moreover it is known [13] that the conditions in eqs (5.66) and (5.67) are also sufficient.

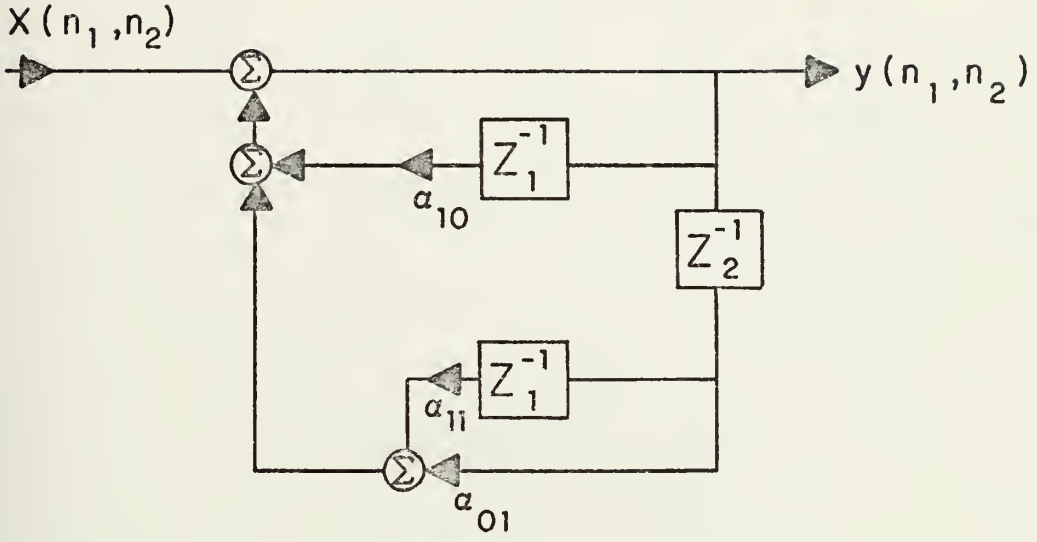

Fig. 5.6: TWO DIMENSIONAL SECOND ORDER COUPLED FILTER IN DIRECT FORM REALIZATION.

TABLE 5.5 : UNIT PULSE RESPONSE $\underline{A}$ FOR SECOND-ORDER COUPLED FILTER

	$n_2 = 0$	1	...	j	
$n_1 = 0$	1	a_{01}	...	a_{01}^j	...
1	a_{10}	$2a_{10}a_{01} + a_{11}$	...	$\sum_{m=0}^{1} \frac{a_{10}^{1-m}}{(1-m)!} \frac{a_{11}^{m}}{m!} \frac{d}{da_{01}} \left(a_{01}^{j+1-m}\right)$	...
2	a_{10}^2	$3a_{10}^2 a_{01} + 2a_{10}a_{11}$	...	$\sum_{m=0}^{2} \frac{a_{10}^{2-m}}{(2-m)!} \frac{a_{11}^{m}}{m!} \frac{d^2}{da_{01}^2} \left(a_{01}^{j+2-m}\right)$	...
3	a_{10}^3	$4a_{10}^3 a_{01} + 3a_{10}^2 a_{11}$	...	$\sum_{m=0}^{3} \frac{a_{10}^{3-m}}{(3-m)!} \frac{a_{11}^{m}}{m!} \frac{d^3}{da_{01}^3} \left(a_{01}^{j+3-m}\right)$	...
4	a_{10}^4	$5a_{10}^4 a_{01} + 4a_{10}^3 a_{11}$	...	$\sum_{m=0}^{4} \frac{a_{10}^{4-m}}{(4-m)!} \frac{a_{11}^{m}}{m!} \frac{d^4}{da_{01}^4} \left(a_{01}^{j+4-m}\right)$	...
5	a_{10}^5	$6a_{10}^5 a_{01} + 5a_{10}^4 a_{11}$	...	$\sum_{m=0}^{5} \frac{a_{10}^{5-m}}{(5-m)!} \frac{a_{11}^{m}}{m!} \frac{d^5}{da_{01}^5} \left(a_{01}^{j+5-m}\right)$	...
⋮	⋮	⋮		⋮	
K	a_{10}^K	$\sum_{m=0}^{1} \frac{a_{01}^{1-m}}{(1-m)!} \frac{a_{11}^{m}}{m!} \frac{d}{da_{10}} \left(a_{10}^{K+1-m}\right)$	...	$\sum_{m=0}^{K} \frac{a_{10}^{K-m}}{(K-m)!} \frac{a_{11}^{n}}{m!} \frac{d^K}{da_{01}^K} \left(a_{01}^{j+K-m}\right)$	
⋮	⋮	⋮	...	⋮	...

VI. NECESSARY OR SUFFICIENT STABILITY CONDITIONS IN N-DIMENSIONS

A. INTRODUCTION

It was shown in Chapter V how conditions for absolute convergence of all unit sample response entries, which were shown in Appendix C to be identical to BIBO stability conditions, are derived for the third and fourth order uncoupled and second order coupled case. The removal of absolute signs enclosing $h(n_1,n_2)$ in the Taylor expansion of a two-dimensional transfer function is possible in general by application of the triangle inequality or whenever all coefficients in the denominator polynomial are positive. This will be shown in the following paragraphs.

1. Necessary and Sufficient Stability Conditions for Positive Characteristic Equation Coefficients in Two-Dimensions

The summation of $\langle \underline{\bar{A}} \rangle$ entries is easily made for the case where all coefficients of the two-dimensional characteristic equation are positive. In fact, the sum of all entries is obtained by observing that

$$H(z_1,z_2) = \frac{1}{1 - \sum_{m_1=0}^{M_1} \sum_{\substack{m_2=0 \\ (m_1+m_2 \neq 0)}}^{M_2} \alpha_{m_1 m_2} z_1^{-m_1} z_2^{-m_2}} \qquad (6.1)$$

$$H(z_1,z_2) = \sum_{\ell=0}^{\infty} \left[\sum_{\substack{m_1=0 \\ (m_1+m_2\neq 0)}}^{M_1} \sum_{m_2=0}^{M_2} \alpha_{m_1 m_2} z_1^{-m_1} z_2^{-m_2} \right]^{\ell} \qquad (6.2)$$

The Taylor expansion of $H(z_1,z_2)$ is defined in eq (4.51) as

$$\sum_{n_1=0}^{\infty} \sum_{n_2=0}^{\infty} h(n_1,n_2)\, z_1^{-n_1} z_2^{-n_2} \qquad (6.3)$$

Therefore, each and every $h(n_1,n_2)$ can be identified from eq (6.2) by computing the binomial expansion and combining terms of equal powers in z_1 and z_2. Moreover if all $\alpha_{m_1 m_2} \geq 0$ then by theorem 4.4 $h(n_1,n_2) \geq 0$ and it follows directly that

$$\sum_{n_1=0}^{\infty} \sum_{n_2=0}^{\infty} |h(n_1,n_2)| = \sum_{n_1=0}^{\infty} \sum_{n_2=0}^{\infty} h(n_1,n_2) \qquad (6.4)$$

It is proven in Appendix C that $H(z_1,z_2)$ is BIBO stable if and only if

$$\sum_{n_1=0}^{\infty} \sum_{n_2=0}^{\infty} |h(n_1,n_2)| < \infty \qquad (6.5)$$

or by application of eq (6.4) if and only if

$$\sum_{n_1=0}^{\infty} \sum_{n_2=0}^{\infty} h(n_1,n_2) < \infty \tag{6.6}$$

But the sum of all unit sample response entries is also identified from the right hand side of eq (6.3) for $z_1 = z_2 = 1$, which by equating eqs (6.2) and (6.3) equals

$$\sum_{n=0}^{\infty} \sum_{n=0}^{\infty} h(n_1,n_2) = \sum_{\ell=0}^{\infty} \left[\sum_{m_1=0}^{M_1} \sum_{m_1=0}^{M_2} \alpha_{m_1 m_2} \right]^{\ell} \tag{6.7}$$

Therefore it is stated that $H(z_1,z_2)$ is BIBO stable for all $\alpha_{m_1 m_2} \geq 0$, if and only if

$$\sum_{\ell=0}^{\infty} \left[\sum_{\substack{m_1=0 \\ (m_1+m_2 \neq 0)}}^{M_1} \sum_{m_2=0}^{M_2} \alpha_{m_1 m_2} \right]^{\ell} < \infty \tag{6.8}$$

But necessary and sufficient conditions for convergence of eq (6.8) are easily identified as

$$\sum_{\substack{m_1=0 \\ (m_1+m_2 \neq 0)}}^{M_1} \sum_{m_2=0}^{M_2} \alpha_{m_1 m_2} < 1 \tag{6.9}$$

2. Sufficient Stability Conditions in Two-Dimensions

The sum of all $<\underline{\bar{A}}>$ entries is by the triangle inequality less than or equal to the sum of all entries of the unit sample response matrix in which each coefficient is replaced by its absolute value, i.e.,

$$\sum_{n_1=0}^{\infty}\sum_{n_2=0}^{\infty}|h(n_1,n_2)| \leq \sum_{\ell=0}^{\infty}\left[\sum_{\substack{m_1=0\\(m_1+m_2\neq 0)}}^{M_1}\sum_{m_2=0}^{M_2}|\alpha_{m_1m_2}|\right]^{\ell} \quad (6.10)$$

But the right hand side of eq (6.10) converges if and only if

$$\sum_{m_1=0}^{M_1}\sum_{m_2=0}^{M_2}|\alpha_{m_1m_2}| < 1 \quad ,$$

which by eq (6.10) is also a sufficient stability condition for $H(z_1,z_2)$.

3. Necessary Stability Conditions in Two-Dimensions

By triangle inequality

$$\sum_{n_1=0}^{\infty}\sum_{n_2=0}^{\infty}|h(n_1,n_2)| \geq \left|\sum_{n_1=0}^{\infty}\sum_{n_2=0}^{\infty}h(n_1,n_2)\right| \quad (6.12)$$

which, by eq (6.7) is equal to

$$\left| \sum_{n_1=0}^{\infty} \sum_{n_1=0}^{\infty} h(n_1,n_2) \right| = \left| \sum_{\ell=0}^{\infty} \left[\sum_{m_1=0}^{M_1} \sum_{m_2=0}^{M_2} \alpha_{m_1 m_2} \right]^{\ell} \right| \quad (6.13)$$

The right hand side of eq (6.13) converges if and only if

$$\left| \sum_{m_1=0}^{M_1} \sum_{m_2=0}^{M_2} \alpha_{m_1 m_2} \right| < 1 \quad (6.14)$$

Equation (6.14) represents necessary conditions for stability of $H(z_1,z_2)$.

For the following sections and in Chapter VII, a mathematical generalization of the above conditions to N-dimensions, improved necessary conditions and a method to determine necessary and sufficient stability conditions in N-dimensions are presented using the theory of modern algebra as in Ref [53]. Notice from the unit sample response corresponding to the third order uncoupled transfer function, that the signs of α_{01} or α_{10} have no influence on the convergency behavior of $\langle \underline{\bar{A}} \rangle$. This observation can be mathematically formulated in general as "symmetry condition" in the N-variable coefficient space.

B. COEFFICIENT SPACE

The expression $(\bar{S}_1,\ldots,\bar{S}_k)$ denotes, using the notation established in Chapter IV, a fixed k-tuple of vector

indices, each of dimension N, i.e., for the third order uncoupled two-dimensional transfer function:

$$(\bar{S}_1,\bar{S}_2,\bar{S}_3) = \{(1,0);\ (0,1);\ (2,0)\} \quad .$$

The characteristic equation $Q(\bar{z})$, of an N-dimensional transfer function $L(\bar{z})$, where

$$Q(\bar{z}) = 1 - \sum_{i=1}^{k} A_i\, z^{\bar{S}_i} \tag{6.15}$$

is uniquely defined by the arbitrary k-tuple of real numbers: $(A_1,\ldots,A_k)$ and by the ordered k-tuple $(\bar{S}_1,\ldots,\bar{S}_k)$ of vector indices.

For a fixed k-tuple of indices $(\bar{S}_1,\ldots,\bar{S}_k)$ the set of all k-tuples $(A_1,\ldots,A_k)$ determines the <u>coefficient space</u> for the polynomial $Q(\bar{z})$. Each k-tuple or 'point' in the k-dimensional Euclidian space IR^k is therefore associated with the polynomial of the form of eq (6.15).

It is said that the point $(A_1,\ldots,A_k)$ is a 'stable point' if $Q(\bar{z})$ associated with the k-tuple of real numbers corresponds to a stable transfer function.

The set of all stable points in IR^k is called the 'region of stability' in IR^k determined by the ordered k-tuple $(\bar{S}_1,\ldots,\bar{S}_k)$ of vector indices.

Example 6.1:

The stability conditions for the second order coupled two-dimensional transfer function derived in the previous chapter define the region of stability in the three-dimensional coefficient space (A_1,A_2,A_3) as shown in Figs 6.1, 6.2, and 6.3.

C. NECESSARY CONDITIONS

In this paragraph, two necessary stability conditions in N-dimensions are derived, namely, that the absolute sum of the leading coefficients and of all coefficients in $Q(\bar{z})$ must be strictly less than one. The term "leading coefficient" is defined in Appendix A.

Theorem 6.1: Let $(A_1,\ldots,A_k)$ be a point in the coefficient space and let A be the set of A_i which are leading coefficients of the polynomial associated with $(A_1,\ldots,A_k)$. If $(A_1,\ldots,A_k)$ is stable, then

$$\left| \sum_{A_i \varepsilon A} A_i \right| < 1$$

Proof: See Appendix M.

Example 6.2:

The two-dimensional full quadratic transfer function has the form

$$L(z_1,z_2) = \frac{1}{1 - \alpha_{10}z_1 - \alpha_{01}z_2 - \alpha_{11}z_1z_2 - \alpha_{20}z_1^2 - \alpha_{02}z_2^2} \qquad (6.16)$$

The set of leading coefficients is identified as

$$A = \{(1,1);\ (2,0);\ (0.2)\} \quad .$$

A necessary condition for stability of eq (6.16) requires that the absolute sum of the leading coefficients, which are α_{11}, α_{20}, and α_{02}, is less than one, i.e.,

$$|\alpha_{11} + \alpha_{20} + \alpha_{02}| \ < \ 1 \quad .$$

Another important result regarding necessary conditions for stability of an N-dimensional transfer function is:

Theorem 6.2: Let $(r_1,\ldots,r_N)$ be any N-tuple such that $r_i = 0,1,$ or -1 for $i = 1,\ldots,N$. Define the k-tuple $(p_1,\ldots,p_k)$ by

$$p_i = (r_1,\ldots,r_N)^{\overline{S}i} \qquad (6.17)$$

Then, if $(A_1,\ldots,A_k)$ is a stable point, it must be true that

$$p_1A_1 + \ldots + p_kA_k \ < \ 1 \qquad (6.18)$$

Proof: See Appendix M.

Example 6.3:

For the full quadratic transfer function of the previous example, let $(r_1, r_2) = (1,-1)$. Then the 5-tuple $(p_1, p_2, p_3, p_4, p_5)$ is defined by

$$p_1 = (1,-1)^{(1,0)} = 1^1 (-1)^0 = 1$$

$$p_2 = (1,-1)^{(0,1)} = 1^0 (-1)^1 = -1$$

$$p_3 = (1,-1)^{(1,1)} = -1$$

$$p_4 = (1,-1)^{(2,0)} = 1$$

$$p_5 = (1,-1)^{(0,2)} = 1$$

Therefore, by Theorem 6.2, if

$$(A_1, \ldots, A_k) = (\alpha_{10}, \ldots, \alpha_{02})$$

is a stable point, then

$$\alpha_{10} - \alpha_{01} - \alpha_{11} + \alpha_{20} + \alpha_{02} < 1$$

Whenever all $r_i = 1$ for $i = 1,\ldots,N$ the following corollary can be stated:

Corollary 6.1: If $(A_1, \ldots, A_k)$ is a stable point, then

$$A_1 + \ldots + A_k < 1 \qquad (6.19)$$

Theorem 6.3: Let $(r_1,\ldots,r_N)$ be any N-tuple such that $r_i = 0,1,$ or -1 for $i = 1,\ldots,N$. Define the k-tuple $(p_1,\ldots,p_k)$ by

$$p_i = (r_1,\ldots,r_N)^{S_i} \tag{6.20}$$

Then, if $(A_1,\ldots,A_k)$ is a stable point, it must be true that

$$|p_1A + \ldots + p_kA_k| < 1 \tag{6.21}$$

Proof: See Appendix M.

Finally, following the above reasoning, corollary 6.2 is formulated as follows:

Corollary 6.2: If $(A_1,\ldots,A_k)$ is a stable point, then

$$|A_1 + \ldots + A_k| < 1 \tag{6.22}$$

D. SUFFICIENT CONDITIONS

Theorem 6.4: Let $(A_1,\ldots,A_k)$ be a point such that

$$\sum_{j=1}^{k} |A_j| < 1 \tag{6.23}$$

then $(A_1,\ldots,A_k)$ is stable.

Proof: Follows directly by generalizing the derivation of section A2 to N-dimensions.

Example 6.4:

A sufficient condition for stability of $L(z_1,z_2)$ as defined in eq (6.16) is:

$$|\alpha_{10}| + |\alpha_{01}| + |\alpha_{11}| + |\alpha_{20}| + |\alpha_{02}| < 1$$

A summarizing discussion of above stability conditions is presented in the next chapter. Note that necessary stability conditions and sufficient stability conditions are listed in tables 6.1 and 6.2 for two-dimensional filters up to sixth order and for selected N-dimensional filters, respectively.

E. SYMMETRY CONDITIONS

Theorem 6.5: Let $\bar{\delta} = (\delta_1,\ldots,\delta_N)$ be any complex vector such that

i) $|\delta_i| \equiv 1$ for all i (6.24)

ii) for $i = 1,\ldots,k$ the numbers p_i defined by

$$p_i = (\delta_1,\ldots,\delta_N)^{\overline{S}_i} \tag{6.25}$$

are all real. (6.25)

Then a point $(A_1,\ldots,A_k)$ is stable if and only if the point $(A_1',\ldots,A_k')$ is stable, where

$$A_j' = p_j A_j \quad \text{for} \quad j = 1,\ldots,k \tag{6.26}$$

Proof: See Appendix M.

Example 6.4:

The third order uncoupled two-dimensional transfer function

$$L(z_1,z_2) = \frac{1}{1 - \alpha_{10}z_1 - \alpha_{01}z_2 - \alpha_{20}z_1^2}$$

If $\delta = -1$

$$p_1 = (-1,-1)^{(1,0)} = -1$$

$$p_2 = (-1,-1)^{(0,1)} = -1$$

$$p_3 = (-1,-1)^{(2,0)} = 1$$

Thus, if (A_1,A_2,A_3) is stable, then the necessary and sufficient condition of Theorem 6.4 prescribes that $(-A_1,-A_2,A_3)$ is stable. This implies that the stability region of $L(z_1,z_2)$ is symmetric with respect to the (A_1) and (A_2) axis, which was already observed in Section A of this chapter.

Transfer Function	$H(z_1,z_2) = \dfrac{1}{1 - \alpha_{10}z_1^{-1} - \alpha_{01}z_2^{-1} - \alpha_{20}z_1^{-2}}$	
	STABILITY CONDITIONS	
Necessary	$\lvert\alpha_{20}\rvert < 1$	Theorem 6.1
	$\lvert\alpha_{10}\rvert + \lvert\alpha_{01}\rvert + \alpha_{20} < 1$	Theorem 6.2
	$\lvert\alpha_{10} + \alpha_{01} + \alpha_{20}\rvert < 1$	Theorem 6.3
	$\lvert-\alpha_{10} + \alpha_{01} + \alpha_{20}\rvert < 1$	
	$\lvert\alpha_{10} - \alpha_{01} + \alpha_{20}\rvert < 1$	
	$\lvert-\alpha_{10} - \alpha_{01} + \alpha_{20}\rvert < 1$	
Sufficient	$\lvert\alpha_{10}\rvert + \lvert\alpha_{01}\rvert + \lvert\alpha_{20}\rvert < 1$	Theorem 6.4

Table 6.1A: Sufficient and necessary stability conditions for the third order (uncoupled) two-dimensional transfer function.

Transfer Function	$H(z_1,z_2) = \dfrac{1}{1 - \sum_{\substack{m_1=0 \; m_2=0 \\ (0<m_1+m_2 \leq 3)}}^{3} \sum^{3} \alpha_{m_1 m_2} z_1^{-m_1} z_2^{-m_2}}$	
STABILITY CONDITIONS		
Necessary	$\lvert\alpha_{30} + \alpha_{21} + \alpha_{12} + \alpha_{03}\rvert < 1$	Theorem 6.1
	$\lvert\alpha_{10} + \alpha_{01} + \alpha_{11} + \alpha_{20} + \alpha_{02} + \alpha_{20} + \alpha_{12} + \alpha_{30} + \alpha_{03}\rvert < 1$	Theorem 6.3
	$\lvert-\alpha_{10} + \alpha_{01} + \alpha_{11} - \alpha_{20} + \alpha_{02} + \alpha_{21} + \alpha_{12} - \alpha_{30} + \alpha_{03}\rvert < 1$	
	$\lvert\alpha_{10} - \alpha_{01} - \alpha_{11} + \alpha_{20} + \alpha_{02} - \alpha_{21} + \alpha_{12} + \alpha_{30} - \alpha_{03}\rvert < 1$	
	$\lvert-\alpha_{10} - \alpha_{01} + \alpha_{11} + \alpha_{20} + \alpha_{02} - \alpha_{21} - \alpha_{12} - \alpha_{30} - \alpha_{03}\rvert < 1$	
Sufficient	$\sum_{\substack{m_1=0 \; m_2=0 \\ (0<m_1+m_2 \leq 3)}}^{3} \sum^{3} \lvert\alpha_{m_1 m_2}\rvert < 1$	Theorem 6.4

Table 6.1B: Sufficient and necessary stability conditions for sixth order (coupled) two-dimensional transfer function.

Transfer Function	
$H(z_1,z_2) = \dfrac{1}{1 - \sum_{m_1=0}^{2}\sum_{m_2=0}^{2}\sum_{m_3=0}^{2} a_{m_1 m_2 m_3} z_1^{-m_1} z_2^{-m_2} z_3^{-m_3}}$ $(0 < m_1+m_2+m_3 \leq 2)$	
STABILITY CONDITIONS	
Necessary:	
$\lvert a_{100} + a_{010} + a_{100} + a_{200} + a_{020} + a_{002} + a_{110} + a_{101} + a_{011} \rvert < 1$	Theorem 6.1
$\lvert -a_{100} + a_{010} + a_{100} + a_{200} + a_{020} + a_{002} - a_{110} - a_{101} + a_{011} \rvert < 1$	
$\lvert a_{100} - a_{010} + a_{100} + a_{200} + a_{020} + a_{002} - a_{110} + a_{101} - a_{011} \rvert < 1$	
$\lvert a_{100} + a_{010} - a_{100} + a_{200} + a_{020} + a_{002} + a_{110} - a_{101} - a_{011} \rvert < 1$	Theorem 6.3
$\lvert -a_{100} - a_{010} + a_{100} + a_{200} + a_{020} + a_{002} + a_{110} - a_{101} - a_{011} \rvert < 1$	
$\lvert -a_{100} + a_{010} - a_{100} + a_{200} + a_{020} + a_{002} - a_{110} + a_{101} - a_{011} \rvert < 1$	
$\lvert a_{100} - a_{010} - a_{100} + a_{200} + a_{020} + a_{002} - a_{110} - a_{101} + a_{011} \rvert < 1$	
Sufficient: $\sum_{m_1=0}^{2}\sum_{m_2=0}^{2}\sum_{m_3=0}^{2}$ $(0 < m_1+m_2+m_3 \leq 2)$	Theorem 6.4

Table 6.2: Sufficient and necessary stability conditions for full quadratic three dimensional transfer function.

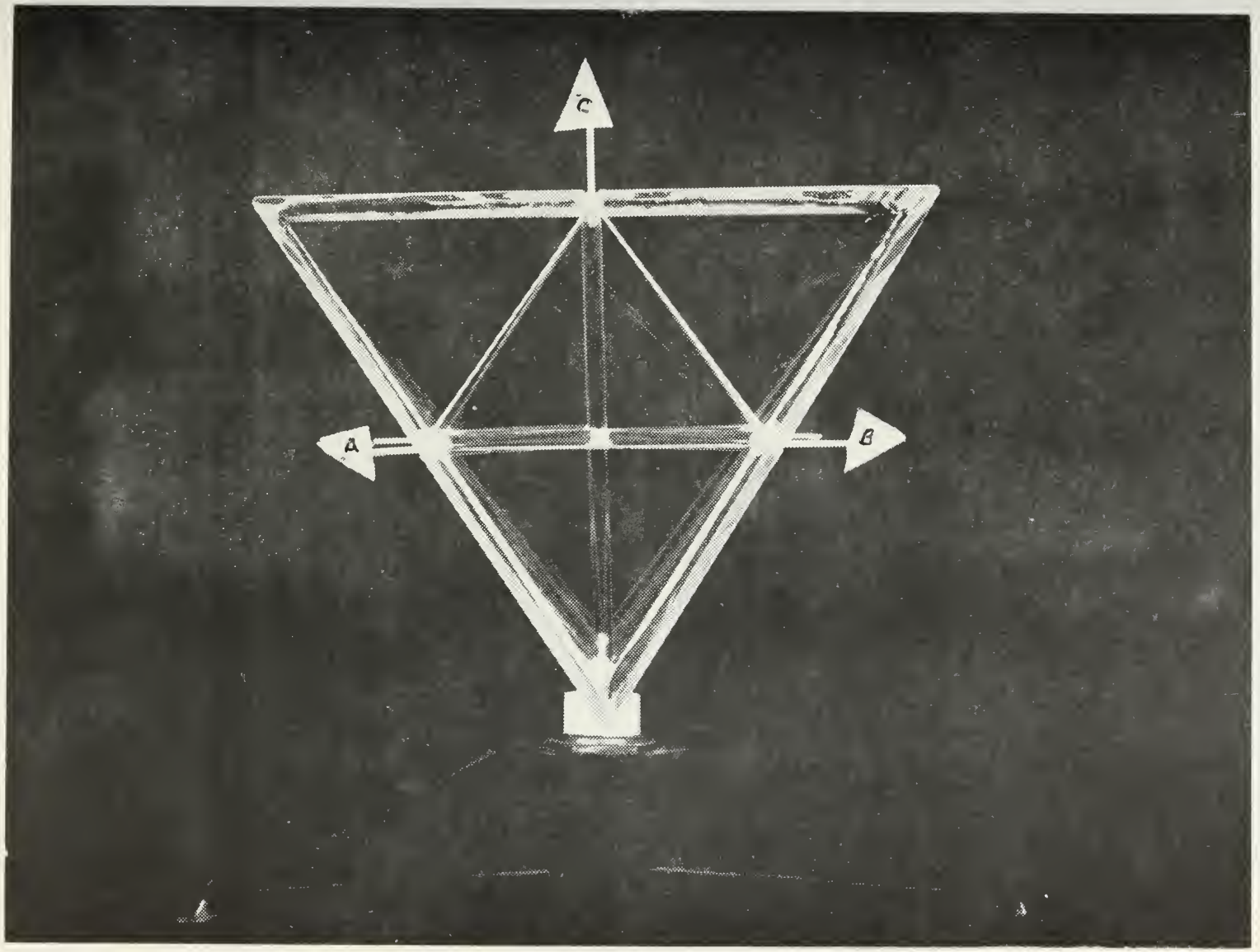

FIG 6.1: STABILITY REGION OF BILINEAR FILTER

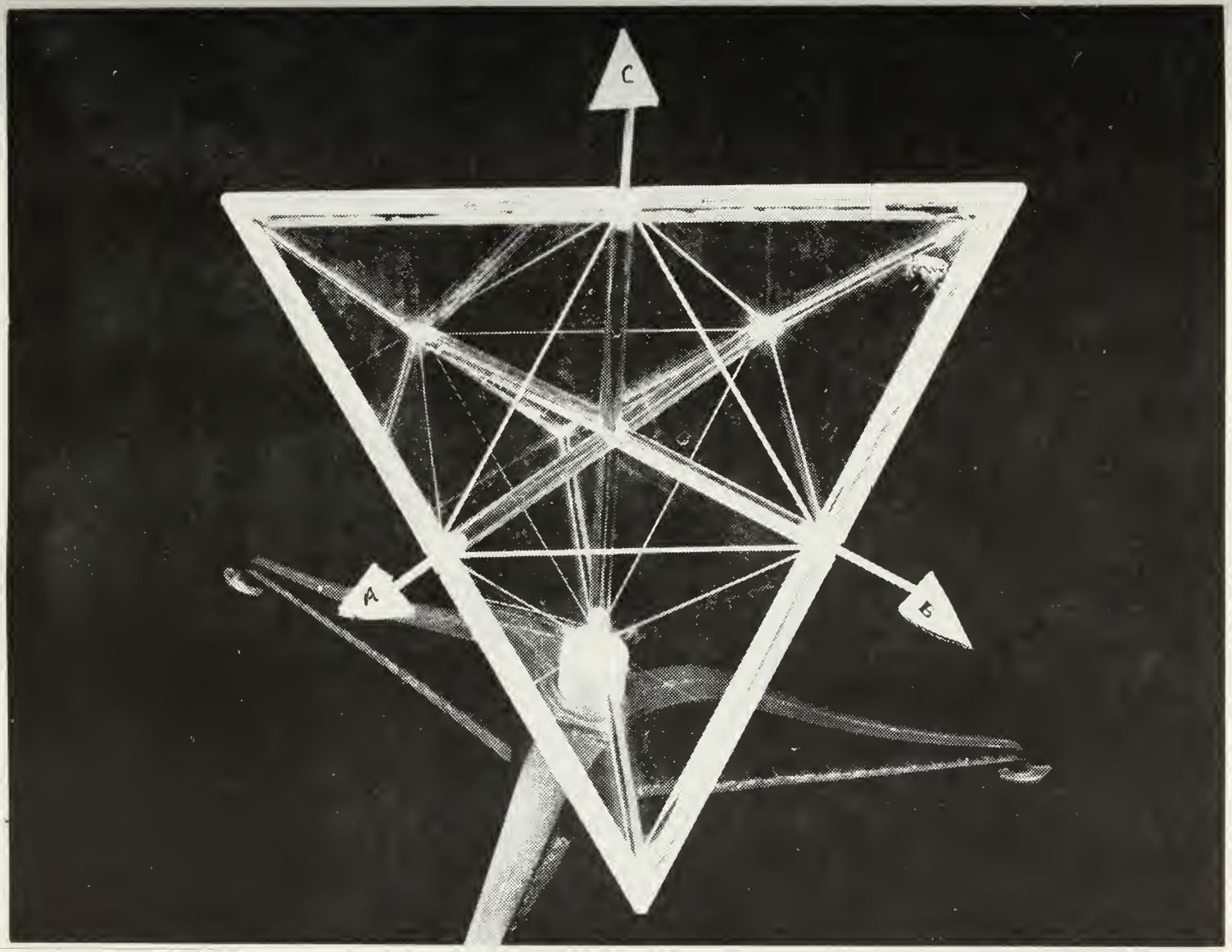

FIG 6.2: STABILITY REGION OF BILINEAR FILTER

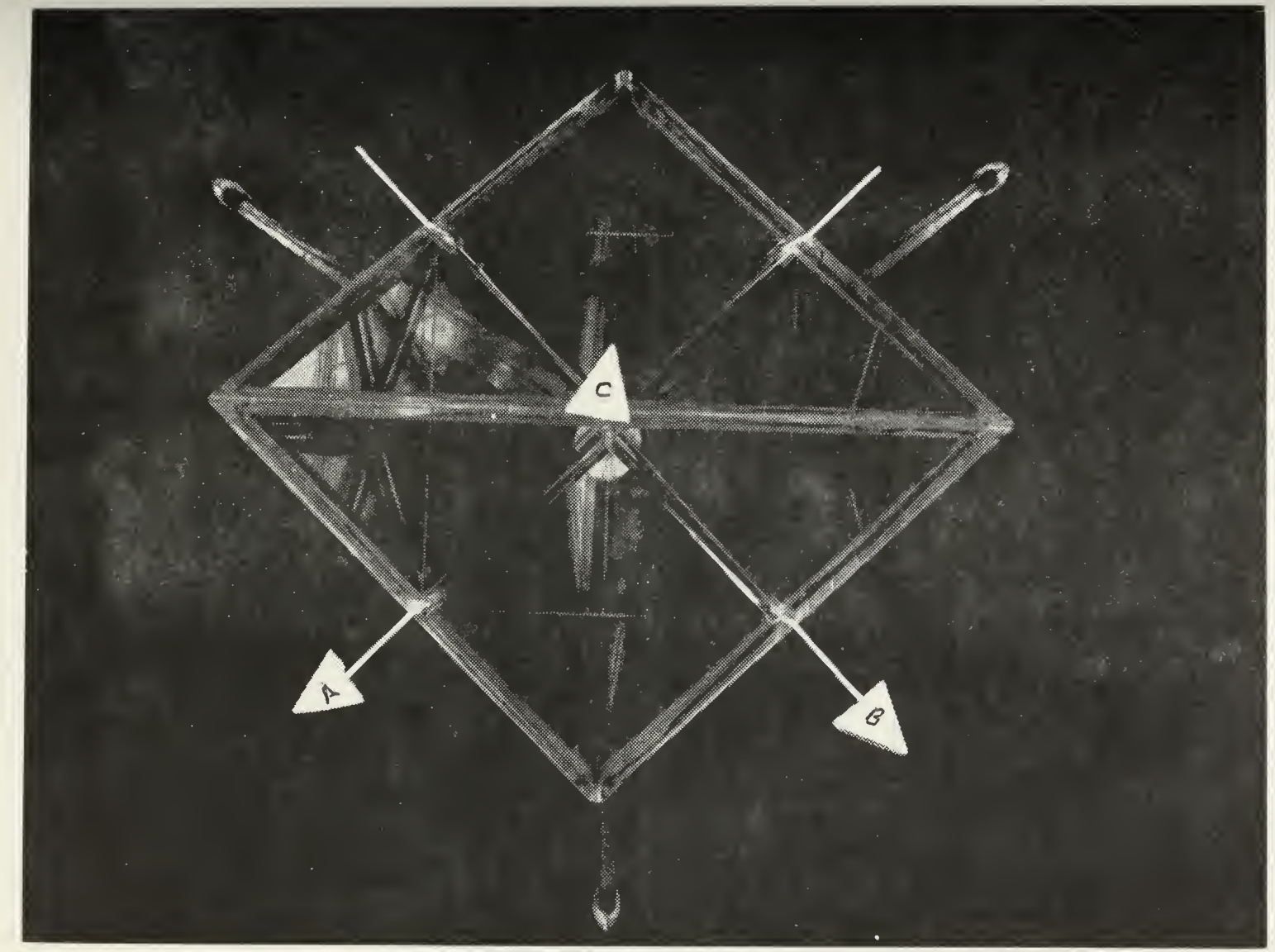

FIG. 6.3: STABILITY REGION OF BILINEAR FILTER

VII. NECESSARY AND SUFFICIENT CONDITIONS IN N-DIMENSIONS

A. INTRODUCTION

A stability region is said to be convex if the loci of all points connecting two stable points lies inside the stable region. It is well known that the stability area for a second order one-dimensional transfer function satisfies convexity, but it can be shown that the stability region of the third order one-dimensional transfer function is not convex. It is, therefore, conjectured that the bounding surfaces of a multi-dimensional higher order filter stability region cannot be described in terms of plane surfaces which explains why the following method to derive necessary and sufficient stability conditions is rather complicated to apply. The advantage of this approach lies in the fact that the method must be applied only once for a particular type of transfer function, which results in a set of stability conditions. These conditions can be easily applied by the design engineer.

B. METHOD TO DERIVE NECESSARY AND SUFFICIENT STABILITY CONDITIONS

The method to derive necessary and sufficient stability conditions consists of two steps:

1. Derive necessary and sufficient conditions for one variable polynomial with complex coefficients using Rouche's theorem.

2. Apply the following theorem and corollary to state necessary and sufficient conditions for N-dimensions.

Theorem 7: Let $(\delta_1,\ldots,\delta_N)$ be any N-tuple of complex numbers such that $r = \max |\delta_i| \leq 1$. Then $Q(z_1,\ldots,z_N)$ is stable if and only if for all $\overline{\delta}$ the polynomial

$$q_{\overline{\delta}}(z) = Q(z \frac{\delta_1}{r} , \ldots , z \frac{\delta_N}{r}) \tag{7.1}$$

is stable.

Proof: See Appendix N.

Corollary 7: The polynomial $Q(\overline{z})$ corresponds to a stable transfer function if and only if for all complex numbers $\overline{\delta}$ such that

$$\max |\delta_i| = 1 , q_{\overline{\delta}}(z) = Q(z\delta_1,\ldots,z\delta_N) \tag{7.2}$$

is stable.

Proof: See Appendix N.

C. EXAMPLE 7.1: FIRST ORDER TRANSFER FUNCTION IN N-DIMENSIONS

Using the notation of the previous chapter the first order case in N-dimensions is defined as follows:

$$Q(\overline{z}) = 1 - \sum_{i=1}^{N} A_i z^{\overline{S}_i} \tag{7.3}$$

where

$$A_1 = a_{(1,0,\ldots,0)}$$

$$A_2 = a_{(0,1,\ldots,0)}$$

$$\vdots$$

$$A_N = a_{(0,0,\ldots,1)}$$

The one variable polynomial

$$q(z) = 1 - \sum_{i=1}^{N} A_i \delta_i z \quad \text{for} \quad \max |\delta_i| = 1$$

is known to be stable if and only if

$$\left| \sum_{i=1}^{N} A_i \delta_i \right| < 1 \tag{7.4}$$

Thus by corollary 7 $Q(\bar{z})$ is stable if and only if eq (7.4) holds for <u>all</u> $\bar{\delta}$, where $\max |\delta_i| = 1$. For $\delta_i = \pm 1$ eq (7.4) results in

$$|A_1| + \ldots + |A_N| < 1 \tag{7.5}$$

which is a necessary condition. But by Theorem 6.4, eq (7.5)

is also a sufficient condition. In summary the first order N-dimensional filter is stable if and only if the sum of the absolute coefficients is less than one.

D. EXAMPLE 7.2: N-DIMENSIONAL TRANSFER FUNCTION WITH POSITIVE COEFFICIENT DENOMINATOR POLYNOMIAL

If $Q(\bar{z})$ is defined as:

$$Q(\bar{z}) = 1 - \sum_{i=1}^{k} a_{(\bar{S}_i)} z^{\bar{S}_i}$$

and all $a_{\bar{S}_i} \geq 0$, then a necessary and sufficient condition for stability is that the sum of all coefficients is less than one.

This follows immediately by applying Theorem 6.2 for $r_i = 1$ to derive the necessary condition and Theorem 6.4 for the sufficient conditions, which for all coefficients positive are identical. Note that the stability condition for the above cases as well as for the bilinear case (without proof) are tabulated in the following Table.(Table 7).

E. SUMMARY

Several powerful methods have been developed to solve the stability question of N-dimensional recursive digital filter. Ultraspherical polynomial and derivative operator methods were used to derive stability conditions for specific low-order two-dimensional cases. Methods for the derivation

of sufficient and necessary stability conditions in two-dimensions and in N-dimensions and for necessary and sufficient stability conditions in N-dimensions were presented and applied to compute low order two-, and N-dimensional stability conditions.

A more complete derivation of stability conditions for low order two- and N-dimensional recursive digital filter and an arrangement in tabular form are left for future research. With the methods presented to solve the stability question the second important part, i.e., approximation of a given specification by a transfer function, will be investigated in the following chapters.

Characteristic Equation	Necessary and Sufficient conditions
$1 - \alpha_{10\ldots0} z_1^{-1} - \alpha_{01\ldots0} z_2^{-1} - \cdots - \alpha_{00\ldots1} z_N^{-1}$ (first order)	$\lvert\alpha_{10\ldots0}\rvert + \lvert\alpha_{01\ldots0}\rvert + \cdots + \lvert\alpha_{00\ldots1}\rvert < 1$
$1 - \sum_{i=1}^{k} \alpha_{\bar{s}_i} z^{-\bar{s}_i}$ (positive coefficients)	$\forall\ \alpha_{\bar{s}_i} \geq 0$ $\sum_{i=1}^{k} \alpha_{\bar{s}_i} < 1$
$1 - \alpha_{10} z_1^{-1} - \alpha_{01} z_2^{-1} - \alpha_{11} z_1^{-1} z_2^{-1}$	$\lvert\alpha_{11}\rvert < 1$ $\lvert\alpha_{10} + \alpha_{01}\rvert < 1 - \alpha_{11}$ $\lvert\alpha_{10} - \alpha_{01}\rvert < 1 + \alpha_{11}$

Table 7: Necessary and Sufficient Stability Conditions.

VIII. PROPAGATION OF TRANSFER FUNCTION COEFFICIENTS IN THE UNIT SAMPLE RESPONSE OF N-DIMENSIONAL FILTER

A. INTRODUCTION

In the previous chapters, stability criteria for N-dimensional filters and implementation forms were developed which will be applied in the following chapters to derive time domain design techniques of N-dimensional recursive digital filter. The design of a recursive digital filter is achieved in two steps, (1) choose filter coefficients to approximate a given response, and (2) ensure that the resulting filter is stable. In Chapters IV, V, VI, and VII, several techniques to solve the stability question were developed and stability criteria for N-dimensional and specific two-dimensional recursive filter derived. In the following chapter the nonrecursive combinatorial formula of Theorem 4.4 will be utilized to relate transfer function coefficients with the entries of the unit sample response in N-dimensions. It will be specifically shown that the coefficient of the characteristic equation $a_{(\bar{n})}$ appears only once in linear form and with coefficient one in the coefficient $h(\bar{n})$ of the corresponding unit sample response. It also appears in nonlinear form, with non-unity coefficients in all $h(\bar{j})$, where $\bar{n} < \bar{j}$.

This important correspondence will be used in Chapter IX to construct an algorithm for the extraction of an all-pole

transfer function from a given unit sample response. The extraction of a rational N-dimensional transfer function will be achieved in the same chapter utilizing a method which is essentially a Padé approximant extended to N-variables. Both of these methods will be incorporated in an algorithm extracting a parallel arrangement of low order sections.

In Chapter X the time domain design step 2 will be achieved by approximating a given unit sample response $\{h_0(\bar{n})\}$, where $0 \leq n_i \leq \infty$, $0 < i \leq N$ by $\{h(\bar{n})\}$, where $0 \leq n_i \leq k_i$; and then using transfer function extraction methods. In step 2 of the design procedure, the approximating transfer function is tested for stability. The quality of the time domain design is evaluated comparing the spectrum of $\{h(\bar{n})\}$ to the spectrum of the extracted transfer function.

B. PROPAGATION RULES IN N-DIMENSIONS

It has been stated in Theorem 4.5 that the Taylor expansion of

$$H(\bar{z}) = \frac{1}{1 - Q(\bar{z}^{-1})} ,$$

where

$$Q(\bar{z}^{-1}) = \sum_{(0 \leq \bar{i}_1 \leq \infty)} a_{(\bar{i})} \, z^{-\bar{i}}$$

has the form:

$$H(\bar{z}) = \sum_{\substack{\bar{n} \\ (0 \leq n_i \leq \infty)}} h(\bar{n})\, z^{-\bar{n}}$$

The coefficients $h(\bar{n})$ are related explicitly to the $a_{(\bar{i})}$ by theorems 4.4 and 4.5 as follows:

$$h(\bar{n}) = \sum_{t_{\bar{S}_0}, \ldots, t_{\bar{S}_k}} \binom{t_{\bar{S}_0} + \ldots + t_{\bar{S}_k}}{t_{\bar{S}_0}, \ldots, t_{\bar{S}_k}} a_{(\bar{S}_0)}^{t_{\bar{S}_0}} \cdots a_{(\bar{S}_k)}^{t_{\bar{S}_k}} \tag{8.1}$$

where

$$t_{\bar{S}_0} \cdot \bar{S}_0 + \ldots + t_{\bar{S}_k} \cdot \bar{S}_k = \left(\bar{n}\right) \tag{8.2}$$

In the next paragraphs, three cases for the appearance of a particular coefficient $a_{(\bar{S}_p)}$, where $(0 \leq p \leq k)$, in the coefficient expression $h(\bar{n})$ of the Taylor expansion of $H(\bar{z})$ are investigated, namely $(\bar{S}_p) > (\bar{n})$, $(\bar{S}_p) = (\bar{n})$, and $(\bar{S}_p) < (\bar{n})$.

1. Propagation Rule for $a_{(\bar{S}_p)}$, where $(\bar{S}_p) > (\bar{n})$

The notation $(\bar{S}_p) > (\bar{n})$ is defined as

$$(S_{p_1}) > (n_1)$$

$$\text{or } (S_{p_2}) > (n_2)$$

$$\vdots$$

$$\text{or } (S_{p_N}) > (n_N)$$

For example, for $(S_{p_1}, S_{p_2}) = (2,1)$ the inequality $(2,1) > (n_1, n_2)$ designates the shaded area in the following graph:

n_1 =	n_2 = 0	1	2	3	4	
0	(0,0)	(0,1)	(0,2)	(0,3)	(0,4)	...
1	(1,0)	(1,1)	(1,2)	(1,3)	(1,4)	...
2	(2,0)	(2,1)	(2,2)	(2,3)	(2,4)	...
3	(3,0)	(3,1)	(3,2)	(3,3)	(3,4)	...
	⋮	⋮	⋮	⋮	⋮	

Propagation Rule I: The coefficient $a_{(\bar{S}_p)}$ of the N-variable characteristic equation of $H(\bar{z})$ does not appear in $h(\bar{n})$, whenever $(\bar{S}_p) > (\bar{n})$, where $h(\bar{n})$ is the $\bar{n}^{th}$ coefficient of the Taylor expansion of $H(\bar{z})$.

Example 8.1:

For

$$H(z_1,z_2) = \frac{1}{1 - \alpha_{20}z_1^{-1} - \alpha_{01}z_2^{-1} - \alpha_{30}z_1^{-3} - \alpha_{54}z_1^{-5}z_2^{-4}} \tag{8.6}$$

the corresponding unit sample response $\{h(n_1,n_2)\}$ is computed from eq (4.21). In the case where $(n_1,n_2) < (5,4)$ eq (8.2), which becomes for the above transfer function

$$t_{(1,0)}\cdot(1,0) + t_{(0,1)}\cdot(0,1) + t_{(3,0)}\cdot(3,0) + t_{(5,4)}\cdot(5,4) = (n_1,n_2)$$

can only be solved, if and only if, $t_{(5,4)} = 0$.

2. Propagation Rules for $a_{(\bar{S}_p)}$, where $(\bar{S}_p) = (\bar{n})$

The notation $(\bar{S}_p) = (\bar{n})$ is defined as

$$(S_{p_1}) = (n_1)$$

$$\text{and} \quad (S_{p_2}) = (n_2)$$

$$\vdots$$

$$\text{and} \quad (S_{p_N}) = (n_N)$$

If $(\bar{S}_p) = (\bar{n})$, then there exists one term in $h(\bar{n})$ where $t_{\bar{S}_p}$ equals one and all other t's are identically zero, therefore eq (8.1) can be rewritten as follows:

$$h(\bar{n}) = \begin{pmatrix} t_{\bar{S}_p} + 0 \\ t_{\bar{S}_p}, 0,\ldots,0 \end{pmatrix} a_{(\bar{S}_p)} \Big|_{t_{\bar{S}_p}=1} + \begin{pmatrix} \text{terms of} \\ \text{order} < \bar{S}_p \end{pmatrix}$$

$$= a_{(\bar{S}_p)} + \begin{pmatrix} \text{terms of} \\ \text{order} < \bar{S}_p \end{pmatrix}$$

In this case $a_{(\bar{S}_p)}$ appears in linear form with coefficient one. This observation is stated as follows:

Propagation Rule II: The coefficient $a_{(\bar{S}_p)}$ of the N-variable characteristic equation of $H(\bar{z})$, appears in $h(\bar{n})$ in linear form with coefficient one, whenever $(\bar{S}_p) = (\bar{n})$.

Example 8.2:

The coefficient $a_{(5,4)} = \alpha_{54}$ of the same transfer function as in example 8.1 appears in $h(5,4)$ in linear form with coefficient one, since

$$t_{(1,0)}(1,0) + t_{(0,1)}(0,1) + t_{(3,0)}(3,0) + t_{(5,4)}(5,4) = (5,4)$$

whenever $t_{(5,4)} = 1$ and all other t's are zero. The terms of order < (5,4) are identified as:

$$t_{(1,0)} = 2 \quad ; \quad t_{(0,1)} = 4 \quad ; \quad t_{(3,0)} = 1 \quad ; \quad t_{(5,4)} = 0 \quad ;$$

and

$$t_{(1,0)} = 5 \quad ; \quad t_{(0,1)} = 4 \quad ; \quad t_{(3,0)} = 0 \quad ; \quad t_{(5,4)} = 0 \quad .$$

Therefore, using eq (4.48a)

$$h(5,4) = \alpha_{54} + 105\ \alpha_{10}^{2}\ \alpha_{01}^{4}\ \alpha_{30} + 112\ \alpha_{10}^{5}\ \alpha_{01}^{4}$$

If the I^{th} diagonal cut of the unit sample response is defined to be the set of indices $(\bar{n}) = (n_1,\ldots,n_N)$, such that

$$\sum_{i=1}^{N} n_i = I \quad , \tag{8.7}$$

then the following corollary to Propagation Rule II can be stated:

Propagation Rule IIA: Consider the first diagonal cut of $\{h(\bar{n})\}$, then each entry corresponds directly to a first order coefficient $a_{(\bar{S}_p)}$ of the N-dimensional characteristic equation of $H(\bar{z})$. In fact, for

$$\sum_{i=1}^{N} n_i = 1 \quad ,$$

$h(\bar{n}) \equiv a_{(\bar{S}_p)}$, whenever $(\bar{S}_p) = (\bar{n})$.

Example 8.3:

The unit sample response entries $h(\bar{n})$ along the first diagonal cut corresponding to the transfer function

$$H(z_1,z_2) =$$

$$\frac{1}{1-\alpha_{100}z_1^{-1} - \alpha_{010}z_2^{-1} - \alpha_{001}z_3^{-1} - \alpha_{110}z_1^{-1}z_2^{-1} - \alpha_{543}z_1^{-5}z_2^{-4}z_3^{-3}}$$

are $h(1,0,0) = \alpha_{100}$

$h(0,1,0) = \alpha_{010}$

$h(0,0,1) = \alpha_{001}$

This follows directly from eq (8.2), which can be written as follows

$$t_{(1,0,0)}^{(1,0,0)} + t_{(0,1,0)}^{(0,1,0)} + t_{(0,0,1)}^{(0,0,1)}$$

$$+ t_{(1,1,0)}^{(1,1,0)} + t_{(5,4,3)}^{(5.4.3)}$$

$$= \{(1,0,0);\ (0,1,0)\ ;\ (0,0,1)\} \quad .$$

(End of example)

It is also observed from eq (8.2), that $a_{(\bar{S}_p)}^{W}$ appears with coefficient one, whenever $(\bar{n}) = W(\bar{S}_p)$, then

$$h(\bar{n}) = \left(\begin{matrix} t_{\bar{S}_p} + 0 \\ t_{\bar{S}_p}, 0, \ldots, 0 \end{matrix} \right) a_{(\bar{S}_p)}^{t_{\bar{S}_p}} \Bigg|_{t_{\bar{S}_p}=W} + \left(\begin{matrix} \text{terms of} \\ \text{order} < W \ (\bar{S}_p) \end{matrix} \right)$$

$$= a_{(\bar{S}_p)}^{W} + \left(\begin{matrix} \text{terms of} \\ \text{order} < W \end{matrix} \ (\bar{S}_p) \right)$$

Therefore, the following rule can be stated:

Propagation Rule III: The coefficient $a_{(\bar{S}_p)}$ of the N-variable characteristic equation of $H(\bar{z})$ appears in $h(\bar{n})$ to the W^{th} power with coefficient one, whenever $(\bar{n}) = W(\bar{S}_p)$.

Example 8.4:

The coefficient $a(5,4) = \alpha_{54}$ of previously used transfer function appear in $h(10,8)$ with coefficient one to the second power, which can be identified from

$$t_{(1,0)} + t_{(0,1)}(0,1) + t_{(3,0)}(3,0) + t_{(5,4)}(5,4) = (10,8)$$

where for $t_{(5,4)} = 2$ all t's must be zero. The terms of order < (10,8) are computed from:

$t_{(1,0)} = 10 \quad t_{(0,1)} = 8 \quad t_{(3,0)} = 0 \quad t_{(5,4)} = 0$

$t_{(1,0)} = 7 \quad t_{(0,1)} = 8 \quad t_{(3,0)} = 1 \quad t_{(5,4)} = 0$

$t_{(1,0)} = 4 \quad t_{(0,1)} = 8 \quad t_{(3,0)} = 2 \quad t_{(5,4)} = 0$

$t_{(1,0)} = 1 \quad t_{(0,1)} = 8 \quad t_{(3,0)} = 3 \quad t_{(5,4)} = 0$

$t_{(1,0)} = 2 \quad t_{(0,1)} = 4 \quad t_{(3,0)} = 1 \quad t_{(5,4)} = 1$

$t_{(1,0)} = 5 \quad t_{(0,1)} = 4 \quad t_{(3,0)} = 0 \quad t_{(5,4)} = 1$

Thus

$$h(10,8) = \alpha_{54}^{2} + \frac{18!}{10!\,8!}\alpha_{10}^{10}\alpha_{01}^{8} + \frac{16!}{7!\,8!}\alpha_{10}^{7}\alpha_{01}^{8}\alpha_{30}^{1}$$

$$+ \frac{14!}{8!\,4!\,2!}\alpha_{10}^{4}\alpha_{01}^{8}\alpha_{30}^{2} + \frac{12!}{8!\,3!}\alpha_{10}\alpha_{01}^{8}\alpha_{20}^{3}$$

$$+ \frac{8!}{2!\,4!}\alpha_{10}^{2}\alpha_{01}^{4}\alpha_{30}\alpha_{54} + \frac{10!}{5!\,4!}\alpha_{10}^{5}\alpha_{01}^{4}\alpha_{54}$$

Propagation Rule IV: In the I^{th} diagonal cut of $h(\bar{n})$, each entry contains an I^{th} order coefficient $a_{(\bar{S}_p)}$ of the N-dimensional characteristic equation of $H(\bar{z})$. In fact, $h(\bar{n}) = a_{(\bar{S}_p)} + (\text{terms of order} < \bar{S}_p)$, where $(\bar{S}_p) = (\bar{n})$.

3. Propagation Rules for $a_{(\bar{S}_p)}$, where $(\bar{S}_p) < (\bar{n})$

The notation $(\bar{S}_p) < (\bar{n})$ is defined (as in Theorem 4.1) as

$$(S_{p_1}) \leq (n_1) ,$$

and $(S_{p_2}) \leq (n_2)$

$$\vdots$$

and $(S_{p_N}) \leq (n_N)$, where the case

$(\bar{S}_p) = (\bar{n})$ is explicitly excluded.

For example, for $(S_{p_1}, S_{p_2}) = (2,1)$ the inequality $(2,1) < (n_1, n_2)$ designates the area, which is shaded in the following graph:

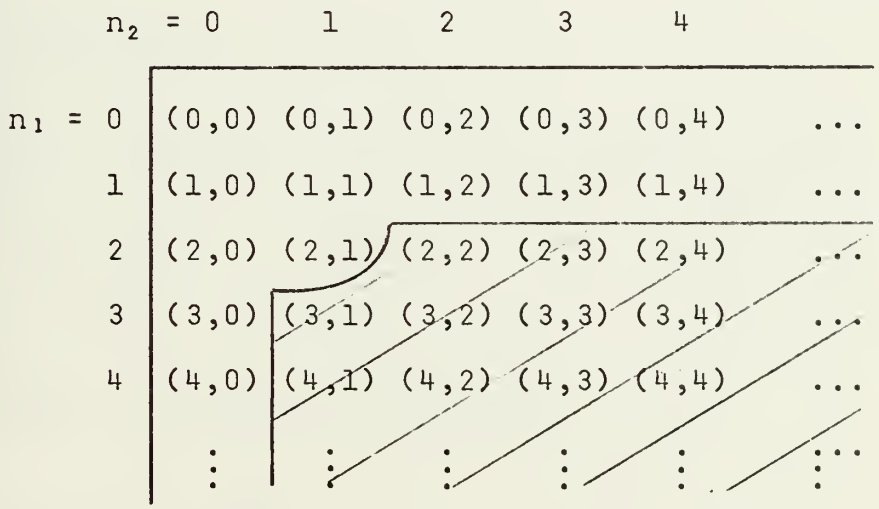

Example 8.5:

The set of coefficients $\{a_{(i_1,i_2)}\}$, where $i_1+i_2 = 2$, appear in the coefficients of the Taylor expansion of

$$H(z_1,z_2) = \frac{1}{1 - \alpha_{10}z_1^{-1} - \alpha_{01}z_2^{-1} - \alpha_{11}z_1^{-1}z_2^{-1} - \alpha_{20}z_1^{-2} - \alpha_{02}z_2^{-2} - \alpha_{54}z_1^{-5}z_2^{-4}} \tag{8.8}$$

along the second diagonal cut, i.e., in $\{h(n_1,n_2)\}$, such that $n_1 + n_2 = 2$, since

$$t_{(1,0)}^{(1,0)} + t_{(0,1)}^{(0,1)} + t_{(1,1)}^{(1,1)} + t_{(2,0)}^{(2,0)} + t_{(0,2)}^{(0,2)} + t_{(5,4)}^{(5,4)} = (2,0)$$

$$t_{(1,0)}^{(1,0)} + t_{(0,1)}^{(0,1)} + t_{(1,1)}^{(1,1)} + t_{(2,0)}^{(2,0)} + t_{(0,2)}^{(0,2)} + t_{(5,4)}^{(5,4)} = (1,1)$$

$$t_{(1,0)}^{(1,0)} + t_{(0,1)}^{(0,1)} + t_{(1,1)}^{(1,1)} + t_{(2,0)}^{(2,0)} + t_{(0,2)}^{(0,2)} + t_{(5,4)}^{(5,4)} = (0,2)$$

Consequently, we obtain by inspection

$$h(2,0) = \alpha_{20} + \alpha_{10}^2$$
$$h(1,1) = \alpha_{11} + 2\alpha_{20}\alpha_{01}$$
$$h(0,2) = \alpha_{02} + \alpha_{01}^2$$

For $(\bar{S}_p) < (\bar{n})$, the following rules can be stated:

Propagation Rule V: The coefficient $a_{(\bar{S}_p)}$ of the N-variable characteristic equation of $H(\bar{z})$ appears in $h(\bar{n})$ for $(\bar{S}_p) < (\bar{n})$, whenever equation (8.2) is satisfied.

Propagation Rule VI: The coefficient $a^{W}_{(\bar{S}_p)}$ of the N-variable characteristic equation of $H(\bar{z})$ appears in $h(\bar{n})$ for $W(\bar{S}_p) < (\bar{n})$, whenever equation (8.2) is satisfied.

C. PROPAGATION DIAGRAMS FOR TWO-DIMENSIONAL TRANSFER FUNCTIONS UP TO THE SIXTH ORDER COUPLED CASE

The Taylor expansion coefficients of two-dimensional sixth order coupled case, i.e.,

$$H(z_1,z_2) = \frac{1}{1 - \alpha_{10}z_1^{-1} - \alpha_{01}z_2^{-1} - \alpha_{11}z_1^{-1}z_2^{-1} - \alpha_{20}z_1^{-2} - \alpha_{02}z_2^{-2} - \alpha_{30}z_1^{-3} - \alpha_{21}z_1^{-2}z_2^{-1} - \alpha_{12}z_1^{-1}z_2^{-2} - \alpha_{03}z_2^{-3}} \tag{8.9}$$

will be investigated in this section. It was shown in Section D of Chapter IV, that in two-dimensions the unit sample response matrix $\underline{\bar{A}}$ is obtained by writing the Taylor expansion of $H(z_1,z_2)$ as matrix product in the following manner

$$H(z_1,z_2) = (1 \quad z_1^{-1} \quad z_1^{-2} \quad z_1^{-3} \quad \ldots)\ \underline{\bar{A}}\ (1 \quad z_2^{-1} \quad z_2^{-2} \quad z_2^{-3} \quad \cdots)^t$$

where

$$\underline{\bar{A}} = \begin{bmatrix} 1 & h(0,1) & h(0,2) & h(0,3) & \dots \\ h(1,0) & h(1,1) & h(1,2) & h(1,3) & \dots \\ h(2,0) & h(2,1) & h(2,2) & h(2,3) & \dots \\ h(3,0) & h(3,1) & h(3,2) & h(3,3) & \dots \\ \vdots & \vdots & \vdots & \vdots & \end{bmatrix}$$

If for a moment the case is considered, where in eq (8.9) all coefficients are zero, except α_{10} and α_{01}, i.e.,

$$H(z_1,z_2) = \frac{1}{1 - \alpha_{10}z_1^{-1} - \alpha_{01}z_2^{-1}} \qquad (8.10)$$

then the corresponding unit sample response matrix $\underline{\bar{A}}$ is shown in Fig(8.1). The coefficients α_{10} and α_{01}, which are by definition (see Appendix A) also the leading coefficients of eq(8.10), appear by propagation rule IIA in $h(1,0)$ and $h(0,1)$ in linear form with coefficient one, and "propagate" by propagation rule V for all $(n_1,n_2) > (1,0)$ and $(n_1,n_2) > (0,1)$, respectively. These considerations are easily identified in Fig 8.1.

An abstract method to graph $\underline{\bar{A}}$ is shown in Fig 8. , in which each entry of the unit sample response matrix is replaced by a cross, and single lines outline the sector of $\underline{\bar{A}}$ in which the coefficients α_{10} and α_{01} "propagate", i.e., appear whenever eq (8.2) is satisfied.

Using similar symbology the leading coefficient propagation of the third-order uncoupled transfer function, i.e.,

$$H(z_1,z_2) = \frac{1}{1 - \alpha_{10}z_1^{-1} - \alpha_{01}z_2^{-1} - \alpha_{20}z_1^{-2}} \qquad (8.11)$$

is shown in Fig 8.2a. The propagation of $\alpha_{20}{}^{W}$, which follows from propagation rule VI is outlined and identified by the coefficient α_{20} raised to the W power.

Figure 8.2c shows the leading coefficient propagation for the second-order coupled (or bilinear) transfer function. It is observed that $\alpha_{11}{}^{W}$ propagates in accordance with propagation rule VI from the W^{th} entry along the main diagonal for all $(n_1,n_2) > (1,1)$.

Figures 8.2d and 8.3e display the leading coefficient propagation of the fourth-order coupled (or full quadratic) and the sixth order coupled transfer function, which follows from propagation rule IV, where I = 2, 3, respectively, and propagation rule V.

The following table relates two-dimensional transfer function and leading coefficient propagation charts up to the sixth order coupled case.

D. SUMMARY

The six propagation rules developed in Section B from the non-recursive combinatorial formula of Theorem 4.4

establish a relationship between the coefficients of a transfer function in N-dimensions to the coefficients of an N-dimensional unit sample response. The rules state explicitly that a transfer function coefficient $a_{(\bar{i})}$ appears only in $h(\bar{i})$ in linear form and with coefficient one and propagates in all $h(\bar{n})$, where $(\bar{n}) > (\bar{i})$. Conversely, if from a given unit sample response it is desired to identify the transfer function coefficient $a_{(\bar{i})}$, then by propagation rule II entry $h(\bar{i})$ contains $a_{(\bar{i})}$, as well as nonlinear terms composed of $a_{(\bar{j})}$, such that $\bar{j} < \bar{i}$. But, if the unit sample response of the transfer function $H_i(z_1,z_2)$ having $\{a_{(\bar{j})}\}$ coefficients, where $\bar{j} < \bar{i}$, is known then $a_{(\bar{i})}$ is equal to the difference of $h_{(\bar{i})}$ and the i^{th} entry of the unit sample response corresponding to $H_i(z_1,z_2)$. Moreover, it will be shown in part B of the next chapter that this idea can be implemented to extract all $a_{(\bar{j})}$ coefficients, where

$$\sum_{i=1}^{N} j_i = I \quad ,$$

at the same time.

TABLE 8 : EXAMPLES OF LEADING COEFFICIENT PROPAGATION IN TWO DIMENSIONS

Type of Filter	Characteristic Equation	Leading Coefficients	Propagation Charts
Second Order Uncoupled	$1 - a_{10} z_1^{-1} - a_{01} z_2^{-1}$	a_{01}, a_{10}	Fig. 8.1b
Third Order Uncoupled	$1 - a_{10} z_1^{-1} - a_{01} z_2^{-1} - a_{20} z_1^{-2}$	a_{20}	Fig. 8.2a
Third Order Uncoupled	$1 - a_{10} z_1^{-1} - a_{01} z_2^{-1} - a_{02} z_2^{-2}$	a_{02}	Fig. 8.2b
Second Order Coupled	$1 - a_{10} z_1^{-1} - a_{01} z_2^{-1} - a_{11} z_1^{-1} z_2^{-1}$	a_{11}	Fig. 8.2c
Fourth Order Coupled	$1 - a_{10} z_1^{-1} - a_{01} z_2^{-1} - a_{11} z_1^{-1} z_2^{-1} - a_{20} z_1^{-2} - a_{02} z_2^{-2}$	a_{20}, a_{11}, a_{02}	Fig. 8.2d
Fifth Order Coupled	$1 - a_{10} z_1^{-1} - a_{01} z_2^{-1} - a_{11} z_1^{-1} z_2^{-1} - a_{20} z_1^{-2} - a_{02} z_2^{-2} - a_{30} z_1^{-3}$	a_{30}	Fig. 8.3a
Fourth Order Coupled	$1 - a_{10} z_1^{-1} - a_{01} z_2^{-1} - a_{11} z_1^{-1} z_2^{-1} - a_{20} z_1^{-2} - a_{02} z_2^{-2} - a_{21} z_1^{-2} z_2^{-1}$	a_{21}	Fig. 8.3b
Fourth Order Coupled	$1 - a_{10} z_1^{-1} - a_{01} z_2^{-1} - a_{11} z_1^{-1} z_2^{-1} - a_{20} z_1^{-2} - a_{02} z_2^{-2} - a_{12} z_1^{-1} z_2^{-2}$	a_{12}	Fig. 8.3c
Fifth Order Coupled	$1 - a_{10} z_1^{-1} - a_{01} z_2^{-1} - a_{11} z_1^{-1} z_2^{-1} - a_{20} z_1^{-2} - a_{02} z_2^{-2} - a_{30} z_1^{-3}$	a_{30}	Fig. 8.3d
Sixth Order Coupled	$1 - a_{10} z_1^{-1} - a_{01} z_2^{-1} - a_{11} z_1^{-1} z_2^{-1} - a_{20} z_1^{-2} - a_{02} z_2^{-2} - a_{30} z_1^{-3} - a_{21} z_1^{-2} z_2^{-1} - a_{12} z_1^{-1} z_2^{-2} - a_{03} z_2^{-3}$	$a_{30}, a_{21}, a_{12}, a_{03}$	Fig. 8.3e

$n_1=0$	$n_2=0$	1	2	3	⋯	j	⋯
$n_1=0$	1	α_{01}	α_{01}^{2}	α_{01}^{3}	⋯	α_{01}^{j}	⋯
1	α_{10}	$2\alpha_{10}\alpha_{01}$	$3\alpha_{10}\alpha_{01}^{2}$	$4\alpha_{10}\alpha_{01}^{3}$	⋯	$(j+1)\alpha_{10}\alpha_{01}^{j}$	⋯
2	α_{10}^{2}	$3\alpha_{10}^{2}\alpha_{01}$	$6\alpha_{10}^{2}\alpha_{01}^{2}$	$10\alpha_{10}^{2}\alpha_{01}^{3}$	⋯	$\frac{(j+1)(j+2)}{2!}\alpha_{10}^{2}\alpha_{01}^{j}$	⋯
3	α_{10}^{3}	$4\alpha_{10}^{3}\alpha_{01}$	$10\alpha_{10}^{3}\alpha_{01}^{2}$	$20\alpha_{10}^{3}\alpha_{01}^{3}$	⋯	$\frac{(j+1)(j+2)(j+3)}{3!}\alpha_{10}^{3}\alpha_{01}^{j}$	⋯
4	α_{10}^{4}	$5\alpha_{10}^{4}\alpha_{01}$	$15\alpha_{10}^{4}\alpha_{01}^{2}$	$35\alpha_{10}^{4}\alpha_{01}^{3}$	⋯	$\frac{(j+1)\cdots(j+4)}{4!}\alpha_{10}^{4}\alpha_{01}^{j}$	⋯
⋮	⋮	⋮	⋮	⋮		⋮	
k	α_{10}^{k}	$(k+1)\alpha_{10}^{k}\alpha_{01}$	$(k+1)(k+2)\alpha_{10}^{k}\alpha_{01}^{2}$	$\frac{(k+1)\cdots(k+3)}{3!}\alpha_{10}^{k}\alpha_{01}^{3}$	⋯	$\frac{(j+1)\cdots(j+k)}{k!}\alpha_{10}^{k}\alpha_{01}^{j}$	⋯
⋮	⋮	⋮	⋮	⋮		⋮	

FIG 8.1a UNIT PULSE RESPONSE $\underline{\underline{A}}$ OF SECOND ORDER UNCOUPLED FILTER

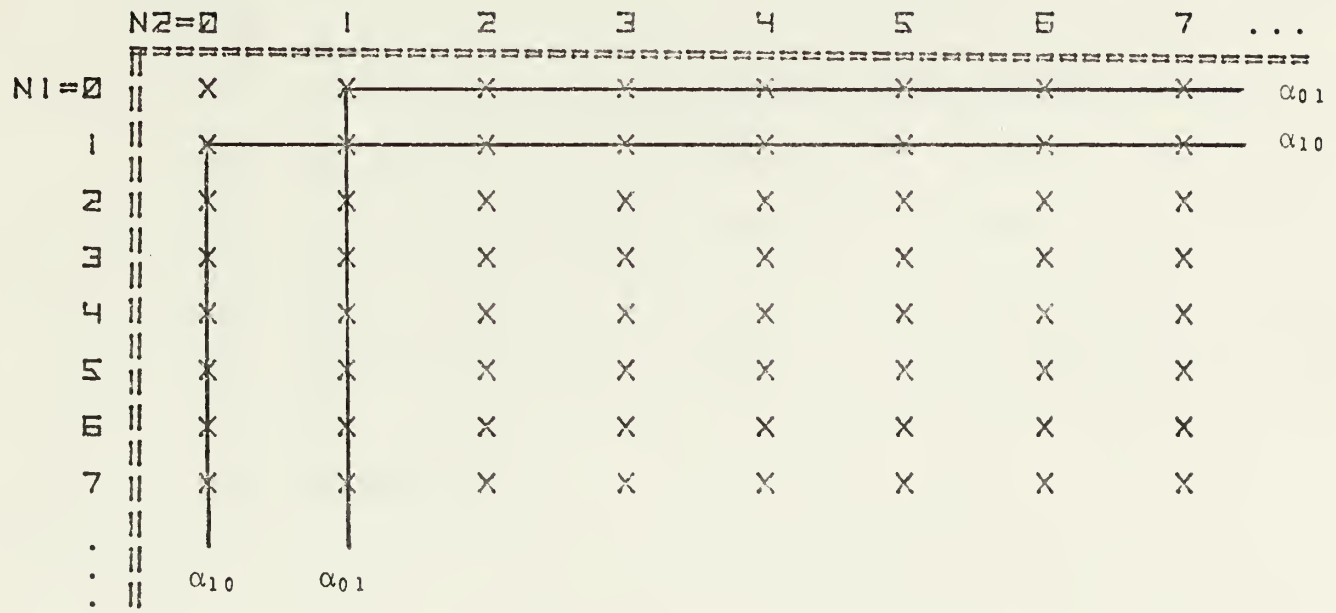

FIG 8.1b: PROPAGATION OF α_{10} AND α_{01} COEFFICIENTS
(SECOND ORDER UNCOUPLED FILTER)

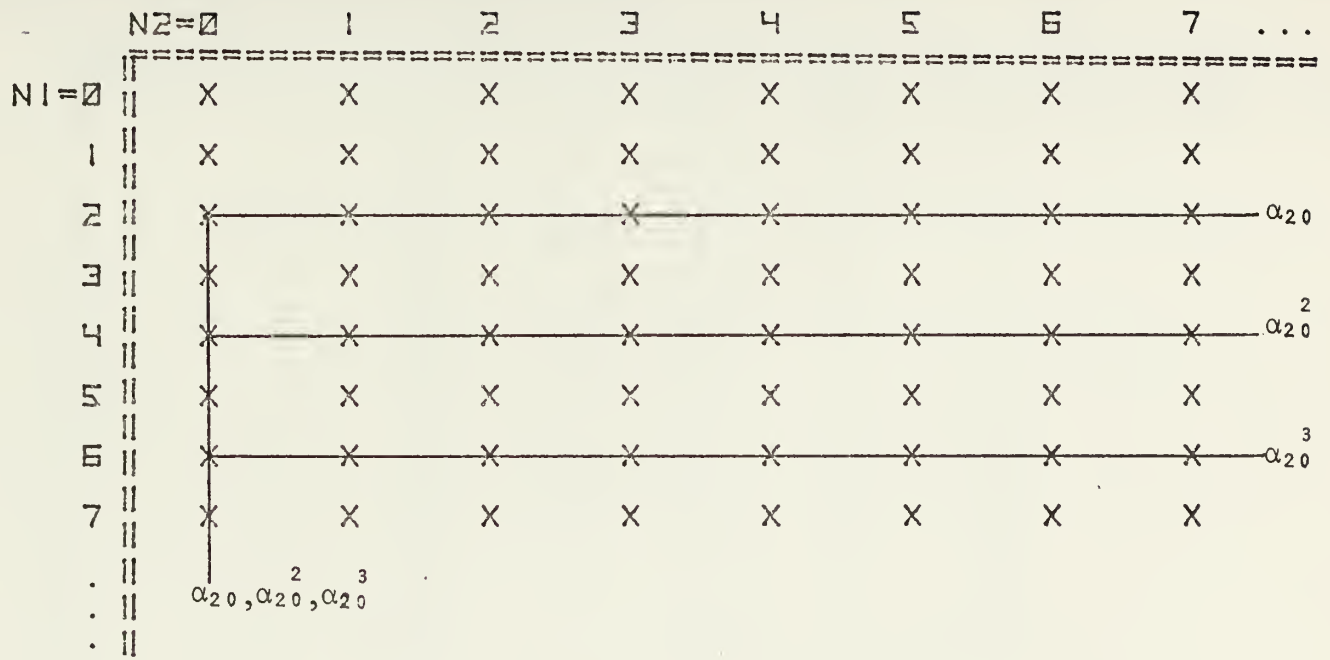

FIG 8.2a : PROPAGATION OF α_{20} (THIRD ORDER UNCOUPLED FILTER)

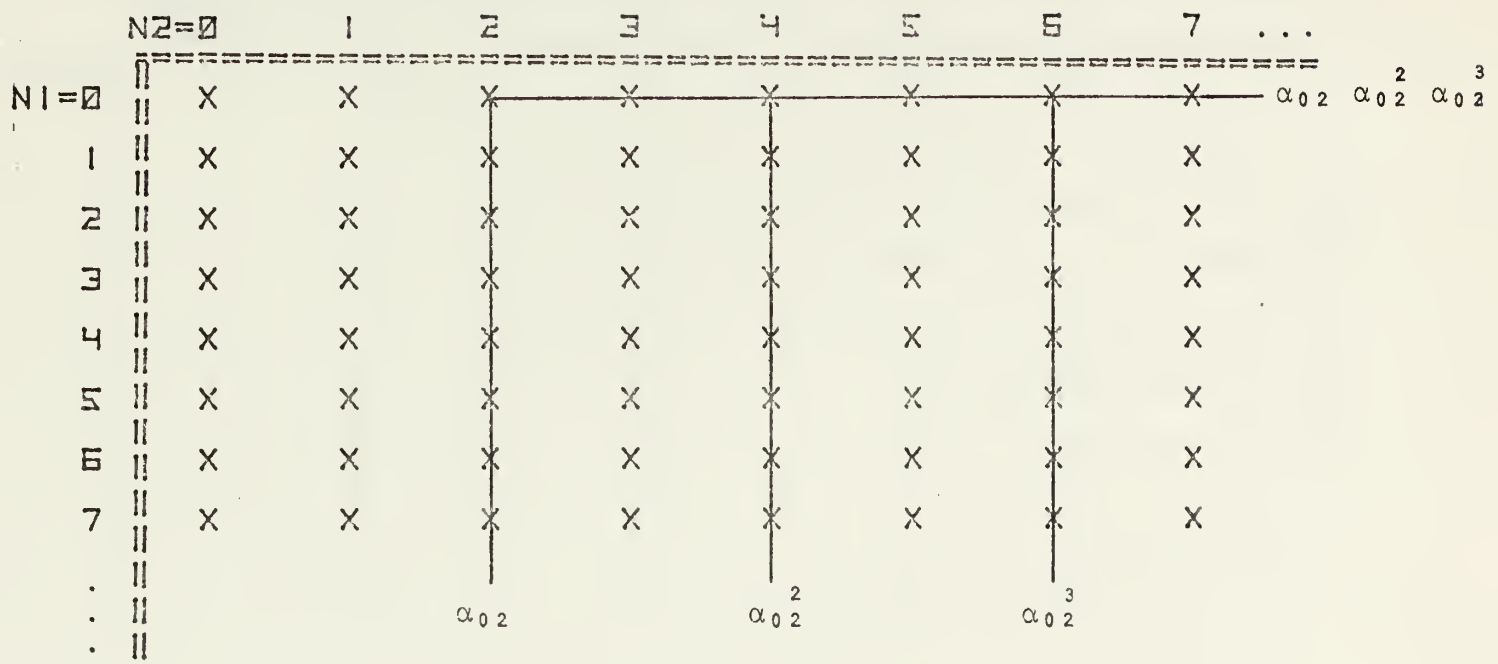

FIG 8.2b : PROPAGATION OF α_{02} COEFFICIENT
(THIRD ORDER UNCOUPLED FILTER)

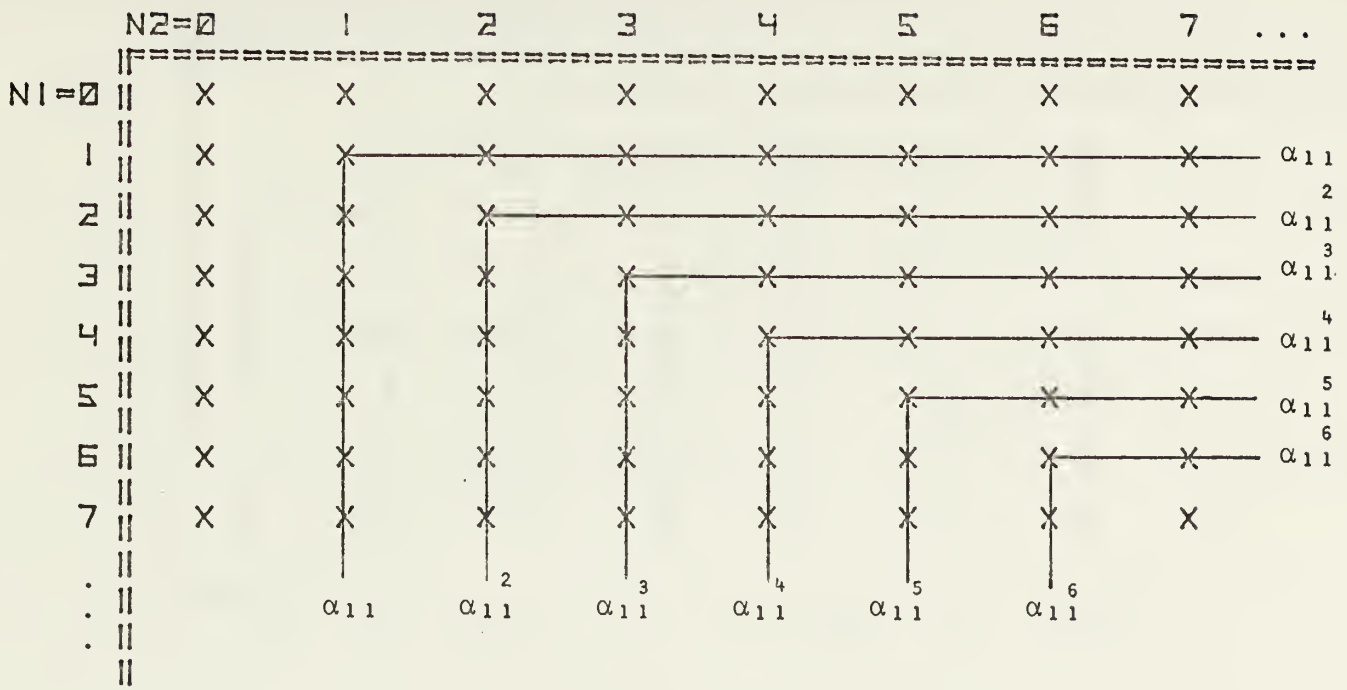

FIG 8.2c : PROPAGATION OF α_{11} COEFFICIENT
(SECOND ORDER COUPLED FILTER)

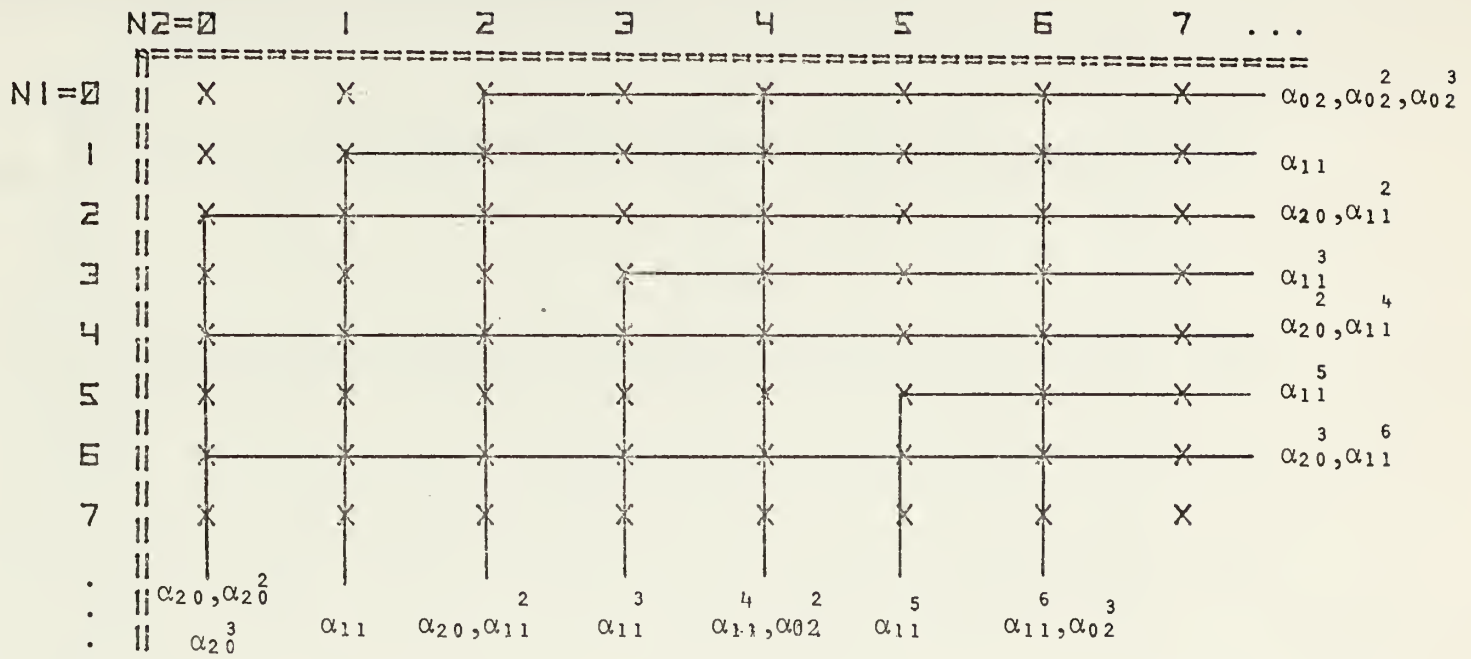

FIG 8.2d: PROPAGATION OF $\alpha_{20}, \alpha_{11}, \alpha_{02}$ COEFFICIENTS
(FOURTH ORDER COUPLED FILTER)

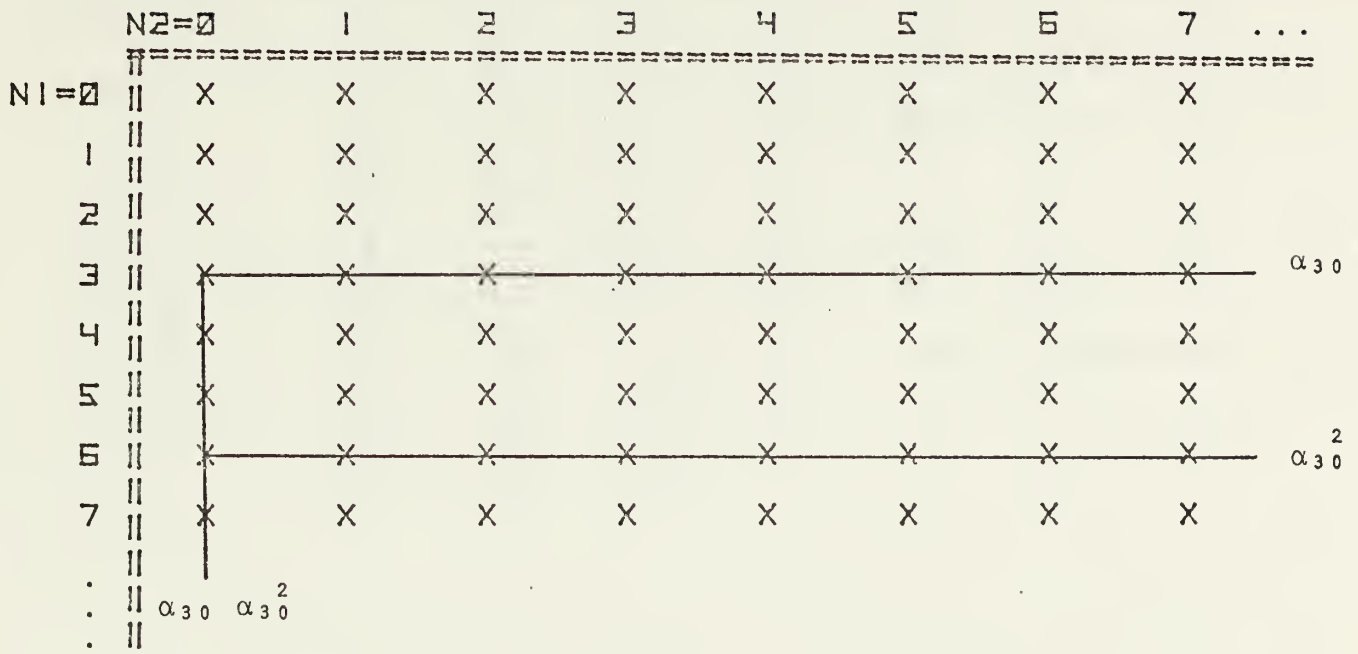

FIG 8.3a: PROPAGATION OF α_{30} COEFFICIENT
(FIFTH ORDER COUPLED FILTER)

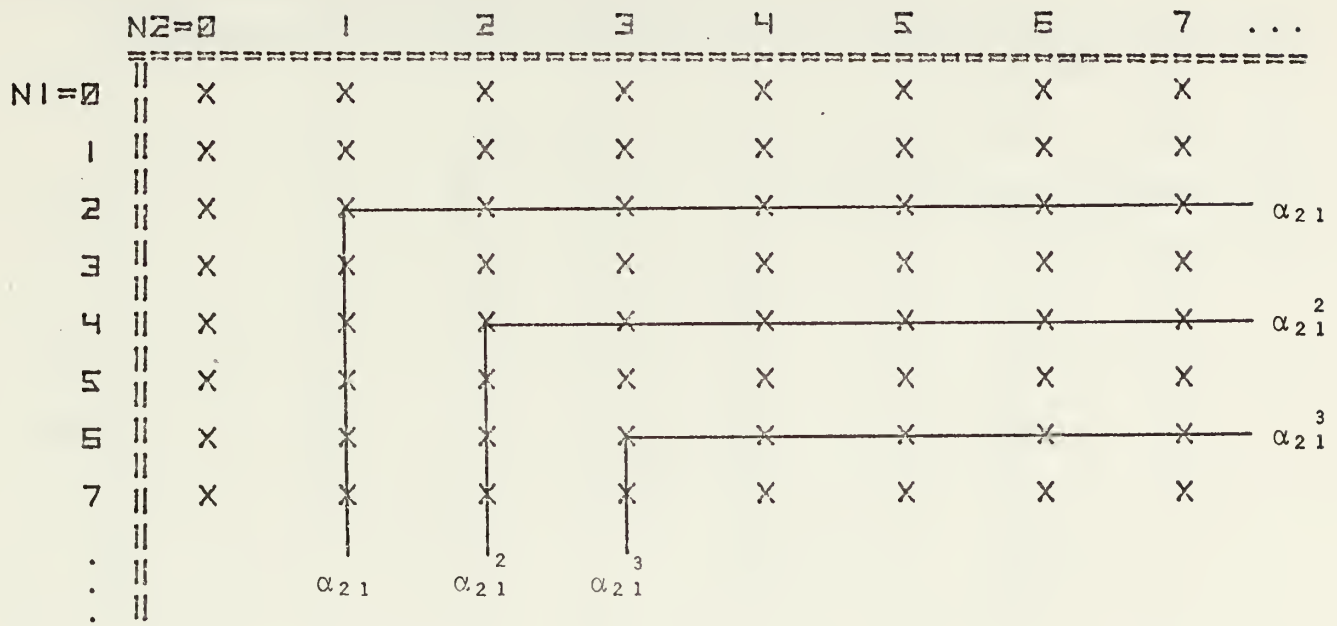

FIG 8.3b : PROPAGATION OF α_{21} COEFFICIENT
(FOURTH ORDER COUPLED FILTER)

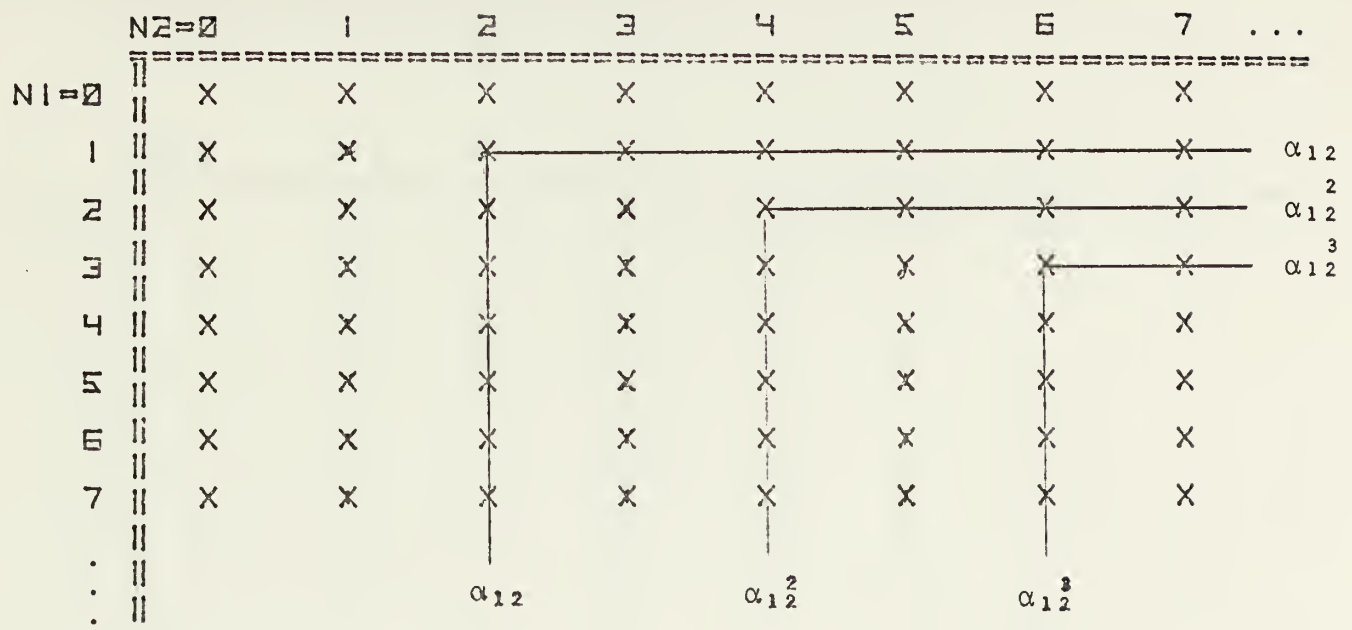

FIG 8.3c: PROPAGATION OF α_{12} COEFFICIENT
(FOURTH ORDER COUPLED FILTER)

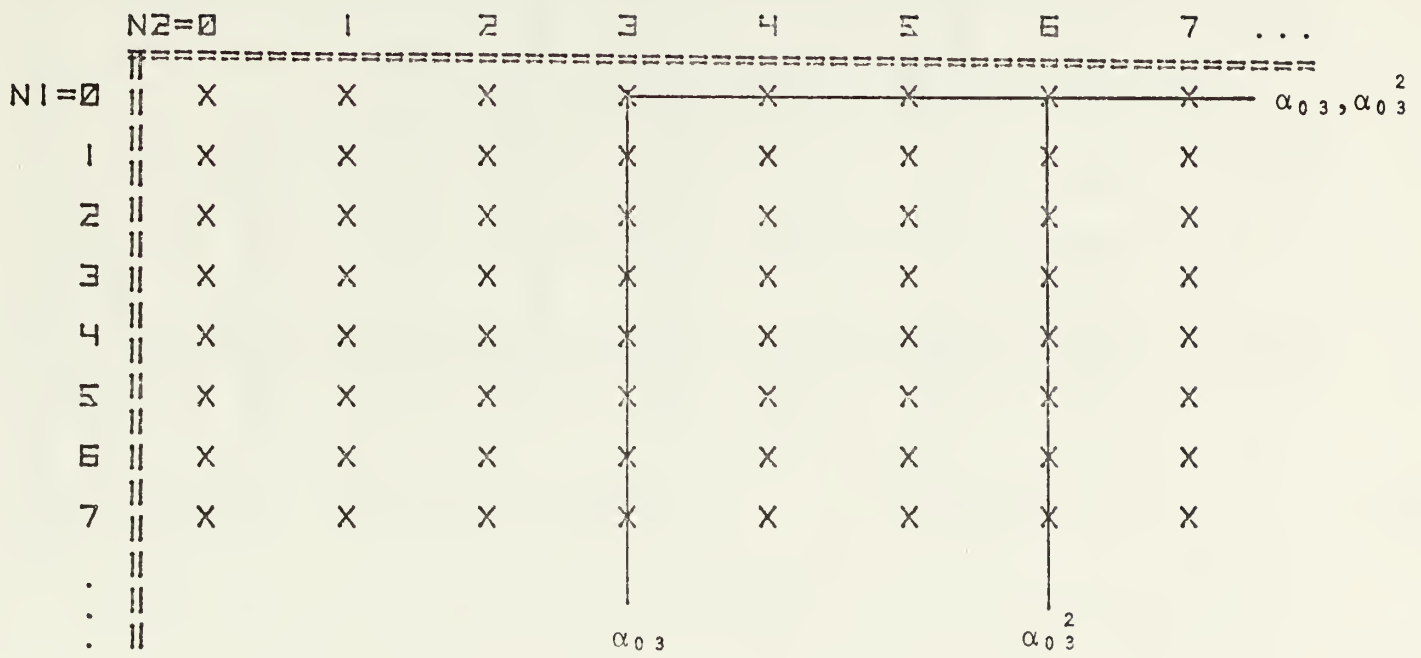

FIG 8.3d: PROPAGATION OF α_{03} COEFFICIENT
(FIFTH ORDER COUPLED FILTER)

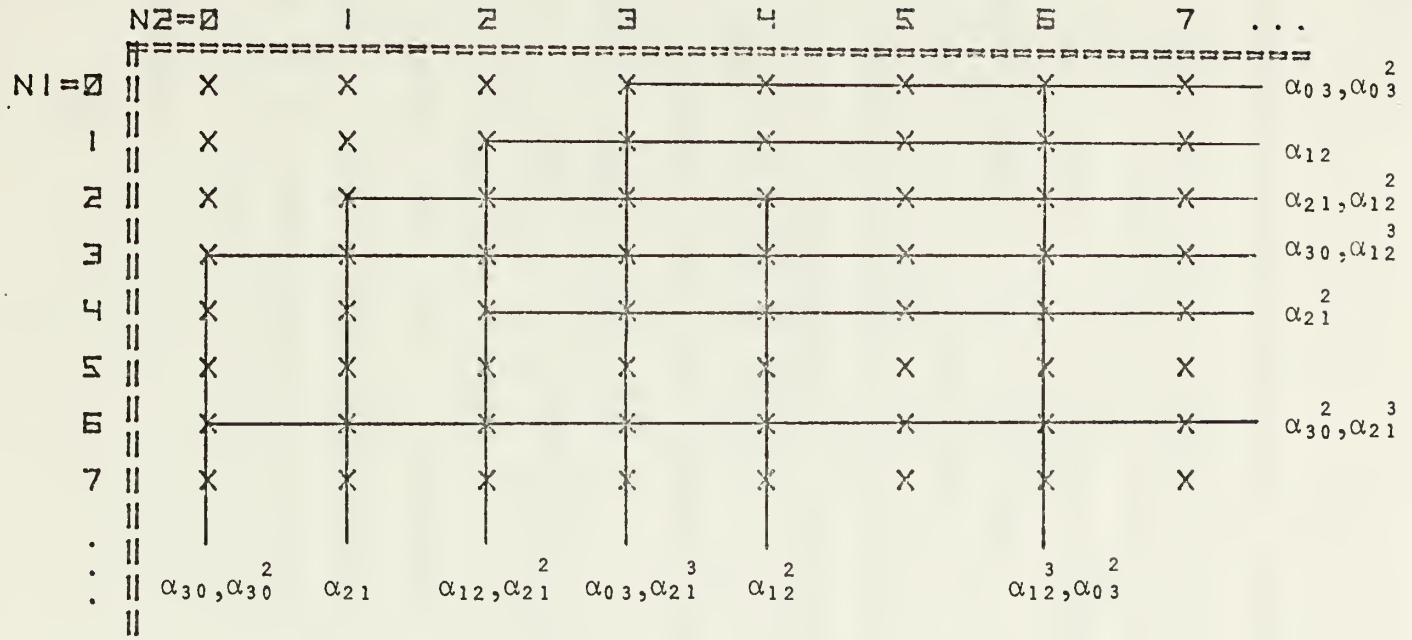

FIG 8.3e: PROPAGATION OF $\alpha_{30},\alpha_{21},\alpha_{12},\alpha_{03}$ COEFFICIENTS
(SIXTH ORDER COUPLED FILTER)

IX. EXTRACTION OF TRANSFER FUNCTIONS FROM A GIVEN UNIT SAMPLE RESPONSE

A. INTRODUCTION

It was outlined in Section D of the previous chapter how the propagation rules can be used to identify a transfer function coefficient from a given unit sample response. This technique is elucidated and is used to develop an algorithm which extracts an all-pole transfer function from a unit sample response in N dimensions.

In Section B, an extraction method for rational transfer functions is presented which is essentially a Padé approximate generalized to N-dimensions. This procedure is shown to require the simultaneous solution of a number of linear difference equations, which will preferably be done using a general purpose digital computer.

Finally, in Section E, an approximate partial fraction expansion in N-variables in terms of all-pole and/or rational low order transfer functions is presented.

A measure of quality for the extraction methods will be established in the next chapter, in which the above techniques are incorporated to solve step 1 of the time domain design procedure.

B. EXTRACTION OF AN N-DIMENSIONAL ALL-POLE TRANSFER FUNCTION FROM A GIVEN UNIT SAMPLE RESPONSE

The given N-dimensional unit sample response $\{h(\bar{n})\}$, where $0 \leq n_i \leq \infty$ and $0 < i \leq N$ is chosen to be normalized, i.e., $h(\bar{0}) = 1$. The transfer function coefficients having first order, i.e., the set of $a_{(\bar{i})}$, for which the sum of all indices of $(\bar{i})$ is identically equal to one, for example,

$$\{a_{(i)}\}$$

$$= [a_{(1,0,\ldots,0)}; a_{(0,1,0,\ldots,0)}; \cdots; a_{(0,\ldots,0,1,0)}; a_{(0,\ldots,0,1)}]$$

are known by propagation rule II A to be identical to the corresponding set of unit sample response entries $h(\bar{n})$, taken along the first diagonal cut.

The entries $\{h(\bar{n})\}$, where $(\bar{n})$ is taken along the second diagonal cut contains, by propagation rule IV, all second order coefficients, in linear form with unit coefficients, as well as first order nonlinear terms. To identify the set of second order coefficients, i.e., $\{a_{(\bar{i})}\}_2$, the unit sample response entries $\{h_1(\bar{n})\}$ corresponding to the transfer function $H_1(\bar{z})$, which has only first order coefficients, is computed and the subtraction $\{\Delta h_2(\bar{n})\} = \{h(\bar{n})\} - \{h_1(\bar{n})\}$ is performed for every term along the second diagonal cut. The resulting set of coefficients $\Delta h_2(\bar{n})$ is identical to the corresponding $\{a_{(i)}\}_2$. It is apparent that this technique leads to an

algorithmic approach in which the k^{th} order coefficients, i.e., $\{a_{(i)}\}_k$ are identified from the set of differences

$$\Delta h_k(\bar{n}) = h(\bar{n}) - h_{k-1}(\bar{n})$$

taken along the k^{th} diagonal cut. If this procedure is continued until $\{\Delta h_j(n)\} = \{(0)\}$, then the all-pole transformation $H_j(\bar{z})$ is the exact transfer function corresponding to the given unit sample respone $\{h(\bar{n})\}$.

It will be shown in the next section that the above technique can be quite readily implemented on a general purpose or table top computer. It is noted that the order of the extracted transfer function in each variable is less than or equal to the size of the unit sample response along the corresponding mesh axis.

C. COMPUTER ALGORITHM FOR THE EXTRACTION OF AN N-DIMENSIONAL ALL-POLE TRANSFER FUNCTION FROM A GIVEN UNIT SAMPLE RESPONSE

The following algorithm incorporates, in addition to the concept developed in Section B, a mean square error criterion which will be used to terminate computations.

Example 9.1: Extraction of a two-dimensional digital transfer function from a given unit pulse response

The N-dimensional algorithm, which is outlined in block diagram form in Fig 9.1, has been implemented on an HP 9830A. The next pages contain an example which is designed to

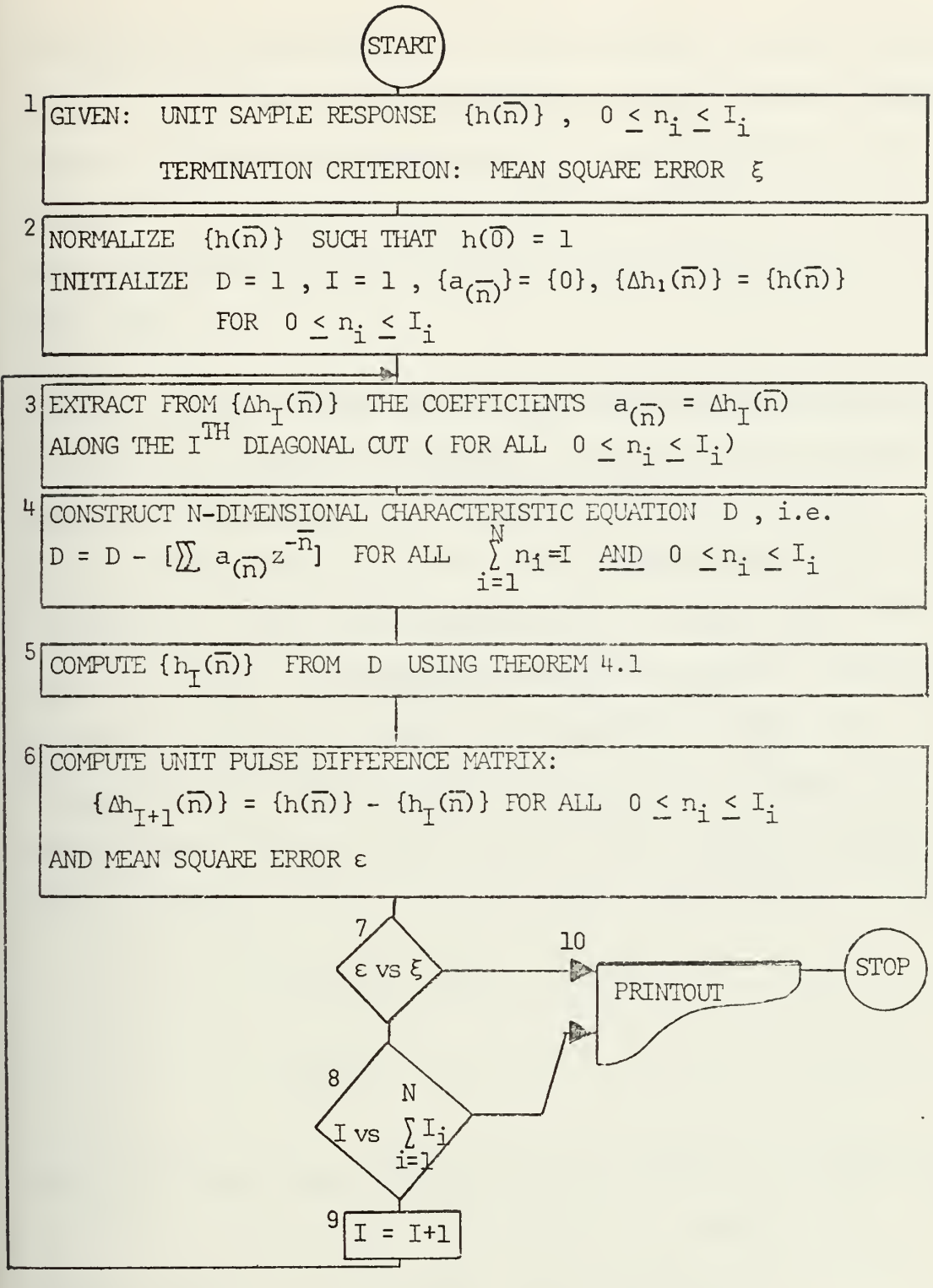
START
1
GIVEN: UNIT SAMPLE RESPONSE $\{h(\bar{n})\}$, $0 \leq n_i \leq I_i$
TERMINATION CRITERION: MEAN SQUARE ERROR ξ
2
NORMALIZE $\{h(\bar{n})\}$ SUCH THAT $h(\bar{0}) = 1$
INITIALIZE $D = 1$, $I = 1$, $\{a_{(\bar{n})}\} = \{0\}$, $\{\Delta h_1(\bar{n})\} = \{h(\bar{n})\}$
FOR $0 \leq n_i \leq I_i$
3
EXTRACT FROM $\{\Delta h_I(\bar{n})\}$ THE COEFFICIENTS $a_{(\bar{n})} = \Delta h_I(\bar{n})$
ALONG THE I^{TH} DIAGONAL CUT (FOR ALL $0 \leq n_i \leq I_i$)
4
CONSTRUCT N-DIMENSIONAL CHARACTERISTIC EQUATION D , i.e.
$D = D - [\sum a_{(\bar{n})} z^{-\bar{n}}]$ FOR ALL $\sum_{i=1}^{N} n_i = I$ AND $0 \leq n_i \leq I_i$
5
COMPUTE $\{h_I(\bar{n})\}$ FROM D USING THEOREM 4.1
6
COMPUTE UNIT PULSE DIFFERENCE MATRIX:
$\{\Delta h_{I+1}(\bar{n})\} = \{h(\bar{n})\} - \{h_I(\bar{n})\}$ FOR ALL $0 \leq n_i \leq I_i$
AND MEAN SQUARE ERROR ε
7
ε vs ξ
10
PRINTOUT
STOP
8
I vs $\sum_{i=1}^{N} I_i$
9
I = I+1

FIG 9.1 EXTRACTION OF AN N-DIMENSIONAL ALL-POLE TRANSFER FUNCTION

illustrate the application of the all-pole transfer function extraction method to a two-dimensional unit pulse response which is chosen for convenience to be normalized, i.e., $h(0,0) = 1$. The unit pulse difference matrix and the mean-squared-error are listed for every traversion of the main loop.

Loop 1. Step 1: (Notice that the step number corresponds to the block number in Fig 9.1). The given unit pulse response $\{h(n_1,n_2)\}$ is listed in Table 9.1, where $0 \leq n_1 \leq 10$, $0 \leq n_2 \leq 10$. The algorithm will be terminated if the mean squared error is less than 10^{-7} , i.e. $\xi = 10^{-7}$. A graphical representation of $\{h(n_1,n_2)\}$ is shown in Fig 9.2. Step 2: Initialize $D(z_1,z_2)$, I , $\{a_{(\overline{n})}\}$, and $\{\Delta h_1(n_1,n_2)\} = \{h(n_1,n_2)\}$. Steps 3,4: The coefficients $a_{(1,0)}$ and $a_{(0,1)}$ are extracted along the first diagonal, i.e. $n_1+n_2 = 1$ of $\{\Delta h_1(n_1,n_2)\}$, where

$$a_{(1,0)} = .52 \quad , \text{ and}$$

$$a_{(0,1)} = .65$$

The two-dimensional characteristic equation is identified as $D(z_1,z_2) = 1 - .52\, z_1^{-1} - .65\, z_2^{-1}$. Step 5: The unit pulse response $\{h_1(n_1,n_2)\}$ corresponding to $H_1(z_1,z_2) = D^{-1}(z_1,z_2)$ is computed using the recursive technique of theorem 4.1. Step 6: The difference matrix $\{\Delta h_1(n_1,n_2)\}$ is obtained by matrix subtraction:

$\{\Delta h_2(n_1,n_2)\} = \{h(n_1,n_2) - \{h_1(n_1,n_2)\}$ and is listed in table 9.2. The mean square error ε is computed as follows:

$$\varepsilon = \frac{1}{1\ 2\ 1} \sum_{n_1=0}^{10} \sum_{n_2=0}^{10} [\Delta h_2(n_1,n_2)]^2 = 29.81 \ .$$

Steps 7,8,9: The tests ε versus 10^{-7} and I versus 20 are traversed and the main loop index I incremented to 2.

Loop 2. Steps 3,4: The coefficients

$$a_{(2,0)} = \Delta h_2(2,0) = -.11$$

$$a_{(1,1)} = \Delta h_2(1,1) = -.2$$

$$a_{(0,2)} = \Delta h_2(0,2) = .003$$

are identified off the second diagonal cut, i.e., $n_1 + n_2 = 2$, of $\{\Delta h_2(n_1,n_2)\}$. The two-dimensional characteristic equation becomes

$$D(z_1,z_2) = 1 - .52z_1^{-1} - .65z_2^{-1} + .11z_1^{-2} + .2z_1^{-1}z_2^{-1} - .003z_2^{-2} \ .$$

Steps 5,6: $\{h_2(n_1,n_2)\}$ is calculated and $\{\Delta h_3(n_1,n_2)\}$. (see table 9.3), is formed. ε = 9.854E -3 . Step 7 to 9: Tests traversed and I incremented to I = 3 .

Loop 3. Steps 3,4: The coefficients $a_{(n_1,n_2)} = \Delta h_3(n_1,n_2)$ for $n_1 + n_2 = 3$ are identified as

$$a_{(3,0)} = \Delta h_3(3,0) = .034$$

$$a_{(2,1)} = \Delta h_3(2,1) = .0032$$

$$a_{(1,2)} = a_{(0,3)} = 0.$$

The two-dimensional characteristic equation becomes

$$D(z_1,z_2) = 1 - 0.52z_1^{-1} - 0.65z_2^{-1} + .11z_1^{-2} + .2z_1^{-1}z_2^{-1} - 0.003z_2^{-2}$$
$$- 0.034z_1^{-3} - 0.0032z_1^{-2}z_2^{-1}$$

Steps 7,8,0: Tests traversed, I = 4.

Loop 4. Steps 3,4: The coefficients are read from the fourth diagonal of $\{\Delta h_4(n_1,n_2)\}$ as

$$a_{(4,0)} = .027$$

$$a_{(1,3)} = -.053$$

$$a_{(3,1)} = a_{(2,2)} = a_{(0,4)} = 0$$

The two-dimensional characteristic equation becomes

$$D(z_1,z_2) = 1 - 0.52z_1^{-1} - 0.65z_2^{-1} + .11z_1^{-2} + .2z_1^{-1}z_2^{-1} - 0.003z_2^{-2}$$
$$- 0.034z_1^{-3} - 0.0032z_1^{-2}z_2^{-1} - 0.027z_1^{-4} + 0.053z_1^{-1}z_2^{-3}$$

Steps 5,6: The unit pulse difference matrix $\{\Delta h_5(n_1,n_2)\}$ is listed in table 9.5. ε = 5.07566E -3 .

Steps 7,8,0: Tests; I = 5.

Loop 5. Steps 3,4: The coefficients along diagonal five are:

$$a_{(4,1)} = 0.0351$$

$$a_{(2,3)} = -0.0107$$

$$a_{(5,0)} = a_{(3,2)} = a_{(1,4)} = a_{(0,5)} = 0 \ ,$$

and

$$D(z_1,z_2) = 1 - 0.52z_1^{-1} - 0.65z_2^{-1} + .11z_1^{-2} + .2z_1^{-1}z_2^{-2} - .003z_2^{-1}$$
$$- 0.034z_1^{-3} - 0.0032z_1^{-2}z_2^{-1} - .027z_1^{-4} + .053z_1^{-1}z_2^{-3}$$
$$- 0.0351z_1^{-4}z_2^{-1} + 0.0107z_1^{-2}z_2^{-3}$$

Steps 5,6: $\{\Delta h_6(n_1,n_2)\}$ is listed in table 8.6. $\varepsilon = 1.71 \cdot 10^{-4}$. Steps 7,8,9: Tests; I = 6.

Loop 6: Steps 3,4: The coefficient $a_{(6,0)} = -0.067$ is the only non-zero entry along the sixth diagonal of $\{\Delta h_6(n_1,n_2)\}$. The two-dimensional characteristic equation becomes:

$$D(z_1,z_2) = 1 - 0.52z_1^{-1} - 0.65z_2^{-1} + .11z_1^{-2} + .2z_1^{-1}z_2^{-1} - 0.003z_2^{-2}$$
$$- 0.034z_1^{-3} - 0.0032z_1^{-2}z_2^{-1} - 0.027z_1^{-4} + 0.053z_1^{-1}z_2^{-3}$$
$$- 0.0351z_1^{-4}z_2^{-1} + .0107z_1^{-2}z_2^{-3} + 0.067z_1^{-6}$$

Steps 5,6: $\{\Delta h_7(n_1,n_2)\}$ is calculated. The mean squared error is identically zero. Step 7: The main loop is terminated by branching to Step 10. Step 10: PRINT OUT:

$$H(z_1,z_2) = \frac{1}{1 - .52z_1^{-1} - .65z_2^{-1} + .11z_1^{-2} + .2z_1^{-1}z_2^{-1} - .003z_2^{-2} - .034z_1^{-3}}$$

$$\frac{}{- .0032z_1^{-2}z_2^{-1} - .027z_1^{-4} + .053z_1^{-1}z_2^{-3} - .0351z_1^{-4}z_2^{-1}}$$

$$\frac{}{+ .0107z_1^{-2}z_2^{-3} + .067z_1^{-6}}$$

Note $H(z_1,z_2)$ is exact, i.e., the unit pulse response of $H(z_1,z_2)$ is identical to the given unit pulse response $\{h(n_1,n_2)\}$.

D. EXTRACTION OF A RATIONAL TRANSFER FUNCTION

An N-dimensional transfer function $G(\bar{z})$ is defined in eq (A.10) as

$$G(\bar{z}) = \frac{\sum\limits_{\bar{\ell},(0\le \ell_i \le L_i)} \beta_{\bar{\ell}}\, z^{-\bar{\ell}}}{1 - \sum\limits_{\bar{m}} \alpha_{\bar{m}}\, z^{-\bar{m}}} \qquad (9.2)$$

$$\left(\begin{array}{c} (0\le m_i \le M_i) \\ \sum\limits_{i=1}^{N} m_i \neq 0 \end{array} \right)$$

The Taylor expansion of $G(\bar{z})$ is obtained by applying eq (4.21) in slightly modified form which takes the numerator polynomial into account:

$$G(\bar{z}) = \sum_{\substack{\bar{n} \\ (0 \le \underline{n}_i \le \infty)}} g(\bar{n})\, z^{-\bar{n}} \quad , \tag{9.3}$$

where

$$g(\bar{n}) = \sum_{\substack{\bar{m} \\ 0 \le \underline{m}_i \le M_i \\ \left(\sum_{i=1}^{N} m_i \neq 0 \right)}} \alpha_{\bar{m}}\, g(\bar{n}-\bar{m}) + \beta_{\bar{n}} \tag{9.4}$$

Equation (9.4) represents the recursion equation corresponding to eq (9.2) for a unit sample input (See Appendix A) and can be verified from Figs 3.12 and 3.13. The application of eq (9.4) is shown in the following short example.

Example 9.2: The Taylor expansion coefficients $g(n_1,n_2)$ for

$$G(z_1,z_2) = \frac{\beta_{00} + \beta_{10}z_1^{-1} + \beta_{01}z_2^{-1} + \beta_{11}z_1^{-1}z_2^{-1}}{1 - \alpha_{10}z_1^{-1} - \alpha_{01}z_2^{-1} - \alpha_{11}z_1^{-1}z_2^{-1} - \alpha_{12}z_1^{-1}z_2^{-2} - \alpha_{21}z_1^{-2}z_2^{-1}}$$

$$\frac{}{\alpha_{20}z_1^{-2} - \alpha_{02}z_2^{-2} - \alpha_{22}z_1^{-2}z_2^{-2}} \qquad (9.5)$$

are computed with eq (9.4) to be

$$g(0,0) = \beta_{00}$$

$$g(1,0) = \alpha_{10}g(0,0) + \beta_{10}$$

$$g(0,1) = \alpha_{01}g(0,0) + \beta_{01}$$

$$g(1,1) = \alpha_{10}g(0,1) + \alpha_{01}g(1,0) + \alpha_{11}g(0,0) + \beta_{11} \quad , \quad \text{and}$$

$$\begin{aligned} g(n_1,n_2) = {} & \alpha_{10}g(n_1-1,n_2) + \alpha_{01}g(n_1,n_2-1) + \alpha_{11}g(n_1-1,n_2-1) \\ & + \alpha_{12}g(n_1-1,n_2-2) + \alpha_{21}g(n_1-2,n_2-1) + \alpha_{20}g(n_1-2,n_2) \\ & + \alpha_{02}g(n_1,n_2-2) + \alpha_{22}g(n_1-2,n_2-2) \end{aligned}$$

whenever $n_1 > 1$, $n_2 > 1$, and all initial conditions are zero. This result can easily be checked from Figs (3.8) through (3.11) in Chapter 3.

If $\{h(n)\}$ represents the unit sample response we wish to synthesize by a recursive transfer function $G(\bar{z})$, as defined in eq (9.2), then by equating terms of $\{h(\bar{n})\}$ and $\{g(\bar{n})\}$ leads to the following equations involving the α's and β's

$$h(\bar{n}) = \sum_{\substack{\bar{m} \\ 0 \le m_i \le M_i \\ \left(\sum_{i=1}^{N} m_i \neq 0\right)}} \alpha_{\bar{m}}\, g(\bar{n}-\bar{m}) + \beta_{\bar{n}} \quad ; \quad \text{for } 0 \le n_i \le L_i \qquad (9.6)$$

and

$$h(\bar{n}) = \sum_{\substack{\bar{m} \\ 0 \le m_i \le M_i \\ \left(\sum_{i=0}^{N} m_i \neq 0\right)}} \alpha_{\bar{m}}\, g(\bar{n}-\bar{m}) \quad ; \quad \text{for } L_i < n \qquad (9.7)$$

It is observed upon fixing L and M, defined as the total number of nonzero coefficients in the numerator and denominator, that there are not enough degrees of freedom

in $G(\bar{z})$ to generate all $\{h(\bar{n})\}$, where $0 \leq n_i \leq \infty$ and $0 < i \leq N$. L and M can be written without loss of generality as

$$L = \prod_{i=1}^{N} (L_i + 1) \quad , \tag{9.8}$$

and

$$M = \prod_{i=1}^{N} (M_i + 1) - 1 \tag{9.9}$$

For example, for eq (9.5)

$$L + M = (L_1+1)(L_2+1) + (M_1+1)(M_2+1) - 1 = 12$$

which is obviously insufficient to generate an infinite by infinite matrix $\{h(n_1,n_2)\}$. Nevertheless, if ξ is minimized, which is defined as the weighted squared difference between the given sample response $\{h(\bar{n})\}$ and the approximating sample response $\{g(\bar{n})\}$ up through the P^{th} sample, where

$$P = \prod_{i=1}^{N} (P_i+1) \tag{9.10}$$

and $$P \geq L + M \tag{9.11}$$

then

$$\xi = \sum_{\substack{\bar{p} \\ (0 \le p_i \le P_i)}} W_{\bar{p}} \left[h(\bar{p}) - g(\bar{p}) \right]^2 \qquad (9.12)$$

where $W_{\bar{p}} > 0$.

The minimization of ξ can only be achieved by iterative means, since $g(\bar{n})$ is a nonlinear function of the α's and β's. There exists, however, one case:

$$P = L + M \qquad (9.13)$$

where the minimizing coefficients of eq (9.12) can be found by solving P <u>linear</u> equations!

By assuming $g(\bar{n}) = h(\bar{n})$ where $0 \le n_i \le L_i$ it is possible to solve eq (9.7) for the α's that enforce $g(\bar{n}) = h(\bar{n})$ for $L_i < n_i$. With the knowledge of all α's, it is possible to solve eq (9.6) for the β's, such that $g(\bar{n}) = h(\bar{n})$ for $0 \le n_i \le L_i$. Equations (9.6) and (9.7) and the regions of summation are illustrated for the important two-dimensional case in the following example.

Example 9.3: Given $\{h(n_1,n_2)\}$, where $0 \leq n_1 \leq P_1$ and $0 \leq n_2 \leq P_2$, find

$$G(z_1,z_2) = \frac{\sum_{\ell_1=0}^{L_1} \sum_{\ell_2=0}^{L_2} \beta_{\ell_1\ell_2} z_1^{-\ell_1} z_2^{-\ell_2}}{1 - \sum_{\substack{m_1=0 \\ (m_1+m_2\neq 0)}}^{M_1} \sum_{m_2=0}^{M_2} \alpha_{m_1m_2} z_1^{-m_1} z_2^{-m_2}} \tag{9.13}$$

where $P = L + M$.

The denominator coefficients are computed from eq (9.7), where

$$h(n_1,n_2) = \sum_{\substack{m_1=0 \\ (m_1+m_2)\neq 0}}^{M_1} \sum_{m_2=0}^{M_2} \alpha_{m_1m_2} h(n_1-m_1,n_2-m_2) \tag{9.14}$$

The β's are computed from eq (9.6), i.e.,

$$h(n_1,n_2) = \sum_{\substack{m_1=0 \\ (m_1+m_2)\neq 0}}^{M_1} \sum_{m_2=0}^{M_2} \alpha_{m_1m_2} h(n_1-m_1,n_2-m_2) + \beta_{n_1n_2} \tag{9.15}$$

Equation (9.14) is summed over all $n_1 > L_1$, $n_2 > L_2$, whereas eq (9.15) is summed over $0 \leq n_1 \leq L_1$, and $0 \leq n_2 \leq L_2$. This can be shown graphically in the following manner:

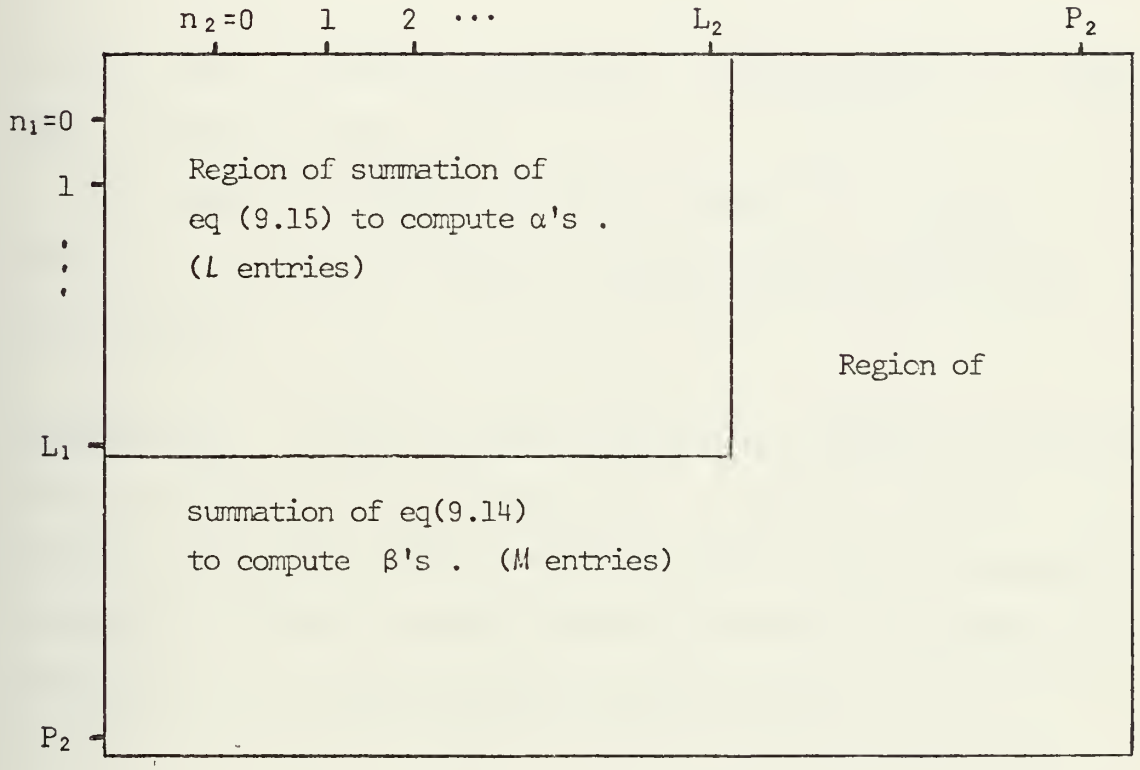

The above outlined procedure equates the truncated power series

$$H(\bar{z}) = \sum_{\substack{\bar{n} \\ (0 \le n_i \le P_i)}} h(\bar{n})\, z^{-\bar{n}} \qquad (9.16)$$

to the first P terms of eq (A.11). It generates the first $h(\bar{n})$ samples, where $(0 \le n_i \le P_i)$, exactly.

The approximation of a power series by a rational function is known in the one-variable case as the Pade approximant.

Example 9.4: Given a causal unit pulse response $\{h(n_1,n_2)\}$ where $0 \le n_1 \le P_1$, $0 \le n_2 \le P_2$, and $\bar{P} = (2,2)$. Extract $G(z_1,z_2)$ which is chosen such that the number of samples in the unit sample response equals the number of coefficients in the transfer function, i.e.

$$G(z_1,z_2) = \frac{\beta_{00} + \beta_{10}z_1^{-1} + \beta_{01}z_2^{-1} + \beta_{11}z_1^{-1}z_2^{-1}}{1 - \alpha_{10}z_1^{-1} - \alpha_{01}z_2^{-1} - \alpha_{11}z_1^{-1}z_2^{-1} - \alpha_{20}z_1^{-2} - \alpha_{02}z_2^{-2}} \qquad (9.17)$$

Comparing eqs (9.13) and (9.17) it is observed that $L_1 = L_2 = 1$.

Equation (9.14) becomes

$$h(n_1,n_2) = \alpha_{10}h(n_1-1,n_2) + \alpha_{01}h(n_1,n_2-1) + \alpha_{11}h(n_1-1,n_2-1)$$
$$+ \alpha_{02}h(n_1,n_2-2) + \alpha_{20}h(n_1-2,n_2)$$

for $n_1 > L_1$ or $n_2 > L_2$, which can be written in matrix form as follows:

$$\begin{bmatrix} h(2,0) \\ h(2,1) \\ h(2,2) \\ h(1,2) \\ h(0,2) \end{bmatrix} = \begin{bmatrix} h(1,0) & 0 & 0 & 0 & h(0,0) \\ h(1,1) & h(2,0) & h(1,0) & 0 & h(0,1) \\ h(1,2) & h(2,1) & h(1,1) & h(2,0) & h(0,2) \\ h(0,2) & h(1,1) & h(0,1) & h(1,0) & 0 \\ 0 & h(0,1) & 0 & h(0,0) & 0 \end{bmatrix} \begin{bmatrix} \alpha_{10} \\ \alpha_{01} \\ \alpha_{11} \\ \alpha_{02} \\ \alpha_{20} \end{bmatrix} \qquad (9.18)$$

Similarly, eq (9.15) becomes

$$h(n_1,n_2) = \alpha_{10}h(n_1-1,n_2) + \alpha_{01}h(n_1,n_2-1) + \alpha_{11}h(n_1-1,n_2-1)$$
$$+ \alpha_{02}h(n_1,n_2-2) + \alpha_{20}h(n_1-2,n_2) + \beta_{n_1n_2}$$

for $0 \leq n_1 \leq 1$ and $0 \leq n_2 \leq 1$.

Or,

$$h(0,0) = \beta_{00} \qquad (9.19a)$$

$$h(1,0) = \alpha_{10}h(0,0) + \beta_{10} \qquad (9.19b)$$

$$h(0,1) = \alpha_{01}h(0,0) + \beta_{01} \qquad (9.19c)$$

$$h(1,1) = \alpha_{10}h(0,1) + \alpha_{01}h(1,0) + \alpha_{11}h(0,0) + \beta_{11} \qquad (9.19d)$$

The above computations are performed for a numerical example as follows:

$$\{h(n_1,n_2)\} = \begin{Bmatrix} 1 & .053 & .133 \\ .05 & .115 & .025 \\ .12 & .024 & .047 \end{Bmatrix}$$

Equations (9.18) and (9.19) can be solved for α's and β's respectively. The result is:

$$\begin{bmatrix} \alpha_{10} \\ \alpha_{01} \\ \alpha_{11} \\ \alpha_{02} \\ \alpha_{20} \end{bmatrix} = \begin{bmatrix} 1.08807 \\ -1.191 \\ .1402 \\ .1961 \\ .06559 \end{bmatrix}$$

$$\begin{bmatrix} \beta_{00} \\ \beta_{10} \\ \beta_{01} \\ \beta_{11} \end{bmatrix} = \begin{bmatrix} 1 \\ -1.03807 \\ 1.244 \\ -.0233 \end{bmatrix}$$

E. EXTRACTION OF A PARALLEL ARRANGEMENT OF LOW ORDER ALL-POLE OR RATIONAL TRANSFER FUNCTION

It is important for the analysis, design and implementation of multi-dimensional recursive digital filters to approximate a given unit sample response or a high-order transfer function by a parallel arrangement of low order sections. It will be shown in the next paragraphs how both of the previously discussed extraction techniques can be applied in an algorithmic approach to extract a parallel arrangement of low order transfer functions.

To approximate a given unit sample response by a parallel arrangement of low order sections, the following steps must be performed:

- Partition a given unit sample response $\{h(\bar{n})\}$, $0 \leq n_i \leq I_i$ in subsections each of size $\bar{R}$, such that $I_i = J_i R_i + J_i$
- Designate each subsection with the vector index $\bar{j}$, in the usual manner, where $0 \leq j_i \leq J_i$

These two steps are illustrated in the following example for the important two-dimensional case:

Example 9.5: The given unit sample response matrix $\{h(n_1,n_2)\}$ where $0 \leq n_1 \leq 29$, and $0 \leq n_2 \leq 14$ is partitioned into $\bar{R} = (4,9)$ size subsections, where $\bar{J} = (2,2)$ as shown in Fig 9.4 and designated as shown in Fig 9.5.

It is noted that the unit sample response entries of the $\bar{j}^{th}$ subsection are

$$h_{\bar{j}}(\bar{r}) = \{h(j_1R_1 + j_1 + r_1,\ldots,j_NR_N + j_N + r_N)\}$$

for $0 \leq r_i \leq R_i$, $0 < i \leq N$, or using vector index notation,

$$h_{\bar{j}}(\bar{r}) = \{h(\overline{jR} + \bar{j} + \bar{r})\}$$

The algorithm for the extraction of a parallel arrangement of low order transfer function, which is shown in Fig 9.6 can be viewed using the above notation as an application of the all-pole transfer function extraction algorithm (see Section C), operating on the vector index $\bar{j}$ and on sets of unit pulse coefficients $h_{\bar{j}}(\bar{r})$.

It was shown in Chapter VIII that the unit sample response entry $h(\bar{n})$ contains the corresponding transfer function coefficient $a_{(\bar{n})}$, as well as non-linear terms composed of $a_{(\bar{k})}$, where $(\bar{k}) < (\bar{n})$, i.e. $k_1 \leq n_1$,

and $k_2 \leq n_2$, ...

and $k_N \leq n_N$, where

$$\sum_{i=1}^{N} k_i \neq \sum_{i=1}^{N} n_i$$

(The notation used is the same as in theorem 4.1 and in Chapter VIII.) Also if the unit sample response of the transfer function $H(\bar{z})$ having $\{a_{(\bar{i})}\}$ coefficients,

satisfying $(\bar{i}) < (\bar{n})$ is known, then $a_{(\bar{n})}$ is equal to the $\bar{n}^{th}$ entry of the difference between $h(\bar{n})$ and the corresponding unit sample response entry of $H(\bar{z})$.

This concept was generalized in Section B of this chapter to extract all $a_{(\bar{n})}$, along the I^{th} diagonal cut, where

$$\sum_{j=1}^{N} n_j = I \quad ,$$

at the same time. It is necessary at this point to further generalize this method by extracting all sets of $a_{(\bar{r})}^{\bar{j}}$, i.e.,

$$\left\{ a_{(\bar{r})}^{\bar{j}} \right\}_I \quad , \quad \text{where} \quad \sum_{i=1}^{N} j_i = I \ , \ 0 \leq r_i \leq R_i$$

along the I^{th} diagonal cut in $\{h_{\bar{j}}(\bar{r})\}$ from the difference of $\{h(\bar{n})\}$ and the unit sample response corresponding to the sets of coefficients extracted along all F diagonal cuts, where $F < I$.

This generalization follows directly from the propagation rules presented in the previous chapter, and will be illustrated in the following example.

Example 9.6: Given a unit sample response $\{h(n_1,n_2)\}$ of the size shown in Fig 9.4.

Extract $\left\{a^{(j_1,j_2)}_{(r_1,r_2)}\right\}_0$ and $\left\{a^{(j_1,j_2)}_{(r_1,r_2)}\right\}_1$

where $0 \le r_1 \le 4$, $0 \le r_2 \le 9$. The set of coefficients

$\left\{a^{(j_1,j_2)}_{(r_1,r_2)}\right\}_0$ is extracted from $\{h(n_1,n_2)\}$ using methods discussed in Sections C and D, and the all-pole transfer function $H_{(0,0)}$ constructed. The corresponding unit sample response is computed and subtracted from $\{h(n_1,n_2)\}$. The resulting $\{\Delta h_0(n_1,n_2)\}$ has zero entries for $0 \le n_1 \le 4$ and $0 \le n_2 \le 9$. The sets of coefficients

$$\left\{a^{(j_1,j_2)}_{(r_1,r_2)}\right\}_1 = \left\{a^{(1,0)}_{(r_1,r_2)}\right\} , \left\{a^{(0,1)}_{(r_1,r_2)}\right\}$$

are read from $\{\Delta h_0(4+r_1,r_2)\}$ and $\{\Delta h_0(r_1,r_2+10)\}$, for r_1,r_2 as above, using previously discussed extraction techniques. This procedure is written in algorithmic form for the N-dimensional case and is shown in Fig 9.6.

The algorithm extracts a set of transfer functions $\{H_{\bar{j}}(\bar{z})\}$ which are arranged as follows:

$$H(\bar{z}) = \sum_{\bar{j}} H_{\bar{j}}(\bar{z})\, z^{-(\bar{j}\bar{R}+\bar{j})} \qquad (9.21)$$

(for all $\bar{j}$ traversed in algorithm)

correspond to a unit sample response which has exactly the same entries as the given unit sample response $h(\bar{n})$ for the first

$$\prod_{i=1}^{N} J_i(R_i+1) + R_i \quad .$$

entries. The order of each transfer function $H_{\bar{j}}(\bar{z})$ is less than or equal to

$$\sum_{i=1}^{N} R_i$$

The following example is designed to illustrate the algorithm in Fig 9.6.

F. EXAMPLE 9.7 FOR E

Given the unit sample response listed in table 9.7 and the termination criterion $\xi = 10^{-7}$, $\{h(n_1,n_2)\}$ is partitioned (step 1 in Fig 9.6) into subsections of $\bar{R} = (1,2)$ size and redesignated (Step 2) such that $\bar{J}$ is identified as: $\bar{J} = (2,2)$. It is noted that $\{h(n_1,n_2)\}$ is not of square form and that the termination criterion in block 10 (Fig 9.6) is therefore adjusted to $I < 2$ accordingly.

Loop 0: The main loop in Fig 9.6 is traversed for $j_1+j_2 = I$, where $I = 0$. In step 2 (corresponds to block 2 of Fig 9.6),

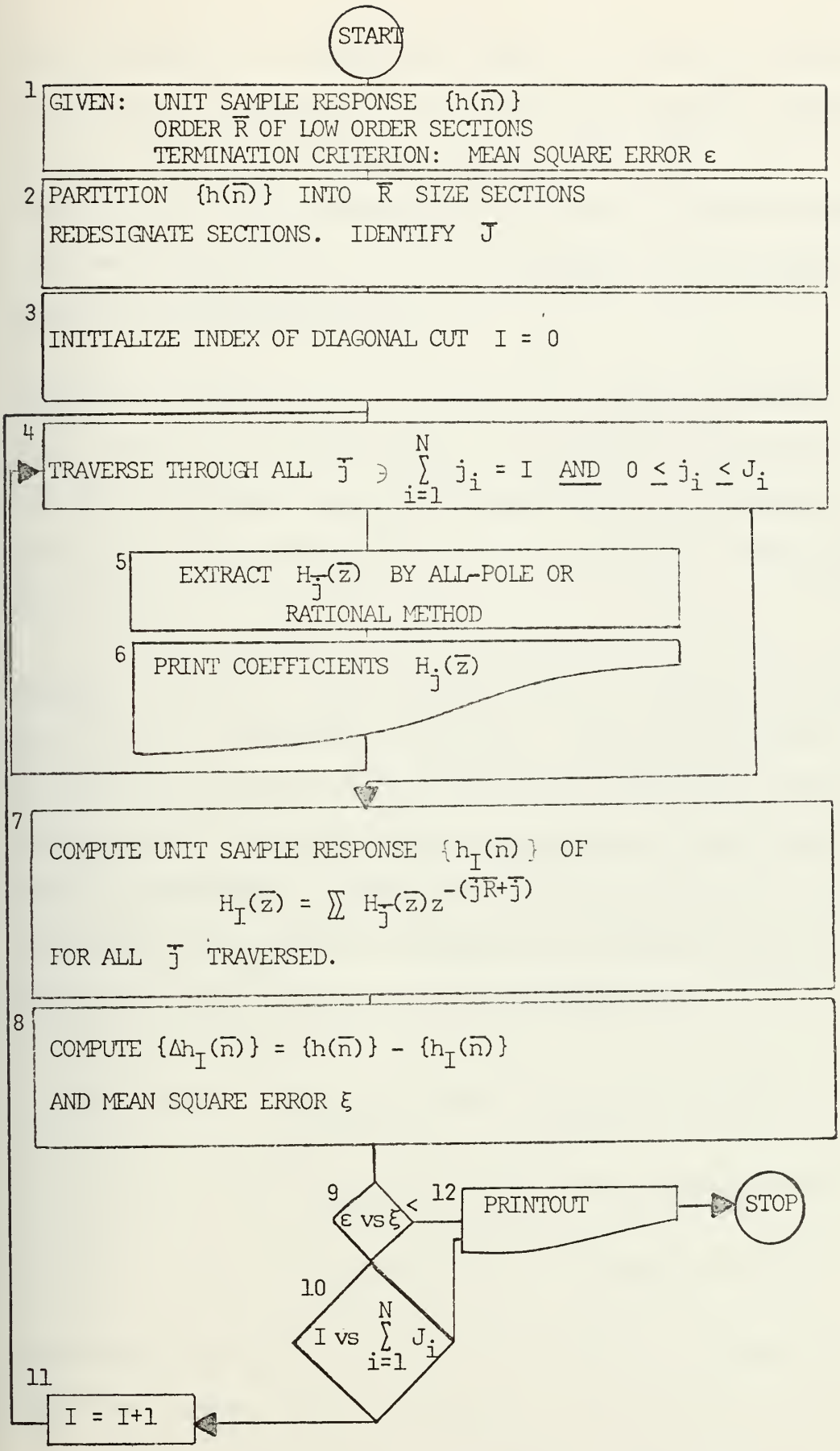

FIG 9.6 EXTRACTION OF PARALLEL ARRANGEMENT OF LOW ORDER ALL-POLE OR RATIONAL TRANSFER FUNCTION

$H_{(0,0)}(z_1,z_2)$ is extracted using the all-pole extraction technique of Section C. The resulting transfer function coefficients are listed in table 9.10a. In step 8 $\{\Delta h_0(n_1,n_2)\}$ is computed, which is also listed in table 9.8. The mean square error is $\varepsilon = .2226185$. The termination tests are traversed and $I = 1$.

Loop 1 is traversed for $j_1+j_2 = 1$, $H_{(1,0)}(z_1,z_2)$ and $H_{(0,1)}(z_1,z_2)$ are extracted. The coefficients are listed in table 9.10b,c. The unit sample difference matrix of step 8 is shown in table 9.8. $\varepsilon = .1558379$. Tests traversed and $I = 2$.

Loop 2: $j_1+j_2 = 2$ the coefficients of $H_{(2,0)}(z_1,z_2)$ $H_{(1,1)}(z_1,z_2)$ and $H_{(0,2)}(z_1,z_2)$ are extracted and listed in table 9.10d,e,f. The unit sample difference matrix $\{\Delta h_2(n_1,n_2)\} = \{0\}$ and mean square error test (step 9) fails, and the algorithm is terminated. The printout in step 12 of the extracted parallel arrangement of third-order transfer function $\{H_{(j_1,j_2)}(z_1,z_2)\}$ is as follows:

$$H(z_1,z_2) = H_{(0,0)}(z_1,z_2) + H_{(1,0)}(z_1,z_2)z_1^{-2}$$
$$+ H_{(0,1)}(z_1,z_2)z_2^{-3} + H_{(1,1)}(z_1,z_2)z_1^{-2}z_2^{-3}$$
$$+ H_{(2,0)}(z_1,z_2)z_1^{-4} + H_{(0,2)}(z_1,z_2)z_2^{-6} .$$

Note that the test in step 8 will only be utilized as an additional regulative to terminate the main loop traversion.

G. DISCUSSION

There were essentially three methods developed in the preceding sections to extract an all-pole, rational and parallel arrangement of low order sections. The order of an all-pole transfer function extracted from $\{h(\bar{n})\}$, $0 \leq n_i \leq I_i$ is as follows

$$\text{order } H(\bar{z}) \leq \sum_{i=1}^{N} I_i$$

The rational transfer function method extracts a transfer function of order determined by the choice of L and M, where $L + M$ equals the number of entries in $\{h(\bar{n})\}$. The low order all-pole or rational extraction technique is an important result by itself, since it represents an approximate partial fraction expansion technique in N-variables which cannot be achieved exactly. (See nonfactorability proof in Appendix B.)

n_1=	n_2= 0	1	2	3	4	5	6	7	8	9	10
0	1.0	0.65	0.4256	0.2785	0.1823	0.1193	0.0781	0.0511	0.0334	0.0219	0.0143
1	0.52	0.476	0.4022	0.2696	0.1811	0.1216	0.0816	0.0547	0.0367	0.0245	0.0164
2	0.1604	0.1794	0.1864	0.1139	0.0635	0.0302	0.0124	3.3E-3	-9.E-4	-2.6E-3	-3.E-3
3	0.0602	0.0718	0.0796	0.0409	9.6E-3	-1.4E-2	-2.E-2	-2.5E-2	-2.3E-2	-1.9E-2	-1.5E-2
4	0.0583	0.0777	0.083	0.0593	0.0343	1.2E-2	-1.5E-3	-7.7E-3	-9.3E-3	-8.5E-3	-7.5E-3
5	-0.0578	-0.0632	-0.048	-0.0421	-0.0386	-0.0376	-0.0339	-2.9E-2	-2.0E-2	-1.7E-2	-11E-2
6	-0.1496	-0.2112	-0.2203	-0.2014	-0.1728	-0.1441	-0.1165	-0.0915	-0.0696	-0.0516	-0.0874
7	-0.1189	-0.1959	-0.2357	-0.2279	-0.1995	-0.1657	-0.1327	-0.1033	-0.0784	-0.0581	-0.0422
8	-0.0625	-0.1153	-0.1549	-0.1546	-0.1337	-0.1051	-0.0777	-0.0547	-0.0368	-2.3E-2	-1E-2
9	-0.036	-0.0712	-0.1011	-0.1032	-0.0876	-0.0630	-0.0391	-1.9E-2	-6E-3	2.8E-3	7.5E-3
10	-1.8E-2	-0.0403	-0.0626	-0.0680	-0.0599	-0.0428	-2.5E-2	-9.2E-3	1E-3	7.8E-3	9.1E-3

TABLE 9.1 GIVEN UNIT PULSE RESPONSE $\{h(n_1,n_2)\}$

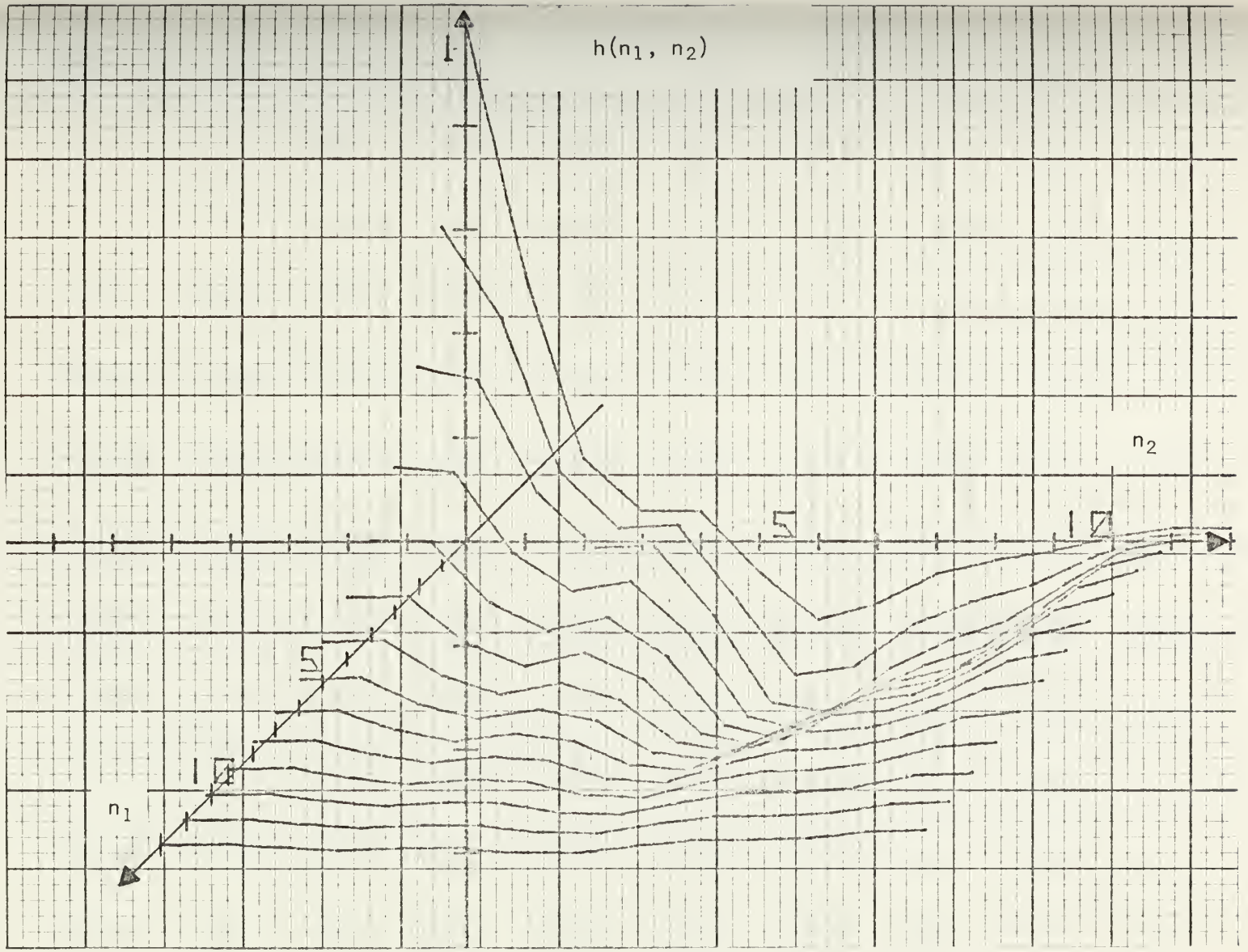

FIG 9.2: GRAPHICAL REPRESENTATION OF GIVEN UNIT PULSE RESPONSE $\{h(n_1,n_2)\}$

n_1=	n_2= 0	1	2	3	4	5	6	7	8	9	10
n_1=0	0	0	3E-3	3.9E-3	3.8E-3	3.3E-3	2.7E-3	2.1E-3	1.6E-3	1.2E-3	8.9E-4
1	0	-0.2	-0.2569	-0.3016	-0.2830	-0.2404	-0.1929	-0.1493	-0.1125	-0.0832	-0.0606
2	-0.11	-0.3478	-0.4991	-0.6287	-0.6605	-0.629	-0.559	-0.4738	-0.3836	-0.3886	-0.3106
3	-0.0804	-0.2938	-0.5144	-0.7313	-0.8689	-.9272	-0.9139	-0.8523	-0.7625	-0.6604	-0.5573
4	-0.0148	-0.1599	-0.3804	-0.6434	-0.8792	-1.057	-1.159	-1.1904	-1.163	-1.091	-0.993
5	-0.0958	-0.2115	-0.3853	-0.6267	-0.3938	-1.149	-1.358	-1.505	-1.581	-1.59	-1.54
6	-0.1694	-0.3012	-0.4542	-0.6574	-0.9139	-1.204	-1.4942	-1.7546	-1.961	-2.102	-2.16
7	-0.1291	-0.2493	-0.3921	-0.5667	-0.8051	-1.1105	-1.463	-1.833	-2.1864	-2.490	-2.7339
8	-0.068	-0.147	-0.2565	-0.3968	-0.6061	-0.9034	-1.288	-1.741	-2.229	-2.71	-3.163
9	-0.0388	-0.0893	-0.1657	-0.2711	-0.4424	-0.7087	-1.088	-1.57	-2.159	-2.79	-3.44
10	-0.019	-0.051	-0.103	-0.182	-0.3183	-0.546	-0.8975	-1.3874	-2.014	-2.75	-3.58

TABLE 9.2 UNIT PULSE DIFFERENCE MATRIX $\{\Delta h_2(n_1,n_2)\}$

n_1=	n_2= 0	1	2	3	4	5	6	7	8	9	10
0	0	0	0	0	0	0	0	0	0	0	0
1	0	0	0	-0.053	-0.0689	-0.0675	-0.0588	-0.04811	-0.0377	-0.0288	-0.0215
2	0	3.2E-3	4E-3	-0.061	-0.0966	-0.1096	-0.1055	-0.0934	-0.0786	-0.0639	-0.0503
3	0.034	-.0475	0.0485	1.2E-3	-0.0369	-0.0637	-0.0739	-0.0737	-0.0678	-0.0593	-0.0507
4	0.0623	0.0923	0.1012	0.0761	0.0467	0.0182	-5E-4	-0.0114	-0.167	-0.0186	-0.0185
5	-0.0523	-0.0505	-0.0297	-0.0206	-0.0165	-0.0166	-0.0155	-0.0134	-0.0107	-8.2E-3	-6E-3
6	-0.01475	-0.2059	-0.2115	-0.1903	-0.1597	-0.1299	-0.1018	-0.0772	-0.056	-0.0399	-0.027
7	-0.1183	-0.1945	-0.2335	-0.2247	-0.1953	-0.1605	-0.1265	-0.0966	-0.0712	-0.0509	-0.2352
8	-0.0625	-0.11528	-0.1549	-0.1546	-0.134	-0.1047	-0.077	-0.0535	-0.035	-0.02141	-0.0117
9	-0.0361	-0.0714	-0.1014	-0.1037	-0.089	-0.064	-0.04	-0.02	-6.7E-3	2.3E-3	7.7E-3
10	-0.018	-0.040	-0.063	-0.0684	-0.060	-0.0435	-0.0253	-0.010	4.1E-4	6.8E-3	1E-2

TABLE 9.3 UNIT PULSE DIFFERENCE MATRIX $\{\Delta h_3(n_1,n_2)\}$

n_1=	n_2= 0	1	2	3	4	5	6	7	8	9	10
0	0	0	0	0	0	0	0	0	0	0	0
1	0	0	0	-0.053	-0.0689	-0.0675	-0.0588	-0.0481	-0.0377	-0.0288	-0.02156
2	0	0	0	-0.0658	-0.1002	-0.1125	-0.1078	-0.0952	-0.0799	-0.06485	-0.0513
3	0	0	0	-0.0425	-0.0737	-0.0935	-0.097	-0.0916	-0.0812	-0.0693	-0.0575
4	0.027	0.0351	0.0344	8E-3	-0.0167	-0.038	-00483	-0.0510	-0.0487	-0.0440	-0.0384
5	-0.0729	-0.0873	-0.0782	-0.0757	-0.0736	-0.0722	-0.0673	-0.0599	-0.0512	-0.0427	-0.035
6	-0.1560	-0.2228	-0.2363	-0.2206	-0.1942	-0.1666	-0.1391	-0.1134	-0.0904	-0.0705	-0.0550
7	-0.1216	-0.2012	-0.2436	-0.2379	-0.2113	-0.1788	-0.1465	-0.1174	-0.0923	-0.0715	-0.0548
8	-0.0638	-0.1175	-0.1589	-0.1600	-0.1403	-0.1126	-0.086	-0.0634	-0.0457	-0.0323	-0.0227
9	-0.036	-0.0725	-0.1032	-0.1061	-0.0913	-0.0674	-0.0439	-0.0251	-0.0115	-2.8E-3	2.2E-3
10	-0.0182	-0.0408	-0.0636	-0.0696	-0.0620	-0.0453	-0.0274	-0.0124	-2.E-3	4E-3	7.1E-3

TABLE 9.4 UNIT PULSE DIFFERENCE MATRIX $\{\Delta h_4(n_1,n_2)\}$

n_1=	n_2=0	1	2	3	4	5	6	7	8	9	10
0	0	0	0	0	0	0	0	0	0	0	0
1	0	0	0	0	0	0	0	0	0	0	0
2	0	0	0	-0.0107	-0.014	-0.0136	-0.011	-9E-3	-7E-3	-5E-3	-4E-3
3	0	0	0	-0.0111	-0.017	-0.0199	-0.0188	-0.0161	-0.0131	-0.1	-7.5E-3
4	0	0.0351	0.03428	0.0236	0.01314	4.4E-3	-1.4E-4	-2.06E-3	-2.5E-3	-2E-3	-1.9E-3
5	0	-0.087	-0.0782	-0.0678	-0.0569	-0.047	-0.0376	-0.0287	-0.021	-0.014	-0.0102
6	-0.067	-0.2228	-0.2363	-0.2163	-0.1843	-0.1509	-0.119	-0.1	-0.069	-0.0508	-0.0368
7	-0.0696	-0.2012	-0.2436	-0.2357	-0.206	-0.1695	-0.13	-0.1032	-0.0775	-0.0570	-0.0412
8	-0.0396	-0.1179	-0.1585	-0.1585	-0.1373	-0.1074	-0.0787	-0.0546	-0.0361	-0.022	-0.0133
9	-0.0192	-0.0725	-0.1032	-0.1056	-0.0898	-0.0645	-0.04	-0.0199	-5E-3	3.3E-3	8.4E-3
10	-0.01373	-0.0408	-0.0636	-0.0693	-0.0612	-0.0437	-0.0250	-9E.3	1.5E-3	8E-3	0.010

TABLE 9.5 UNIT PULSE DIFFERENCE MATRIX $\{\Delta h_5(n_1,n_2)\}$

n_1=	n_2=0	1	2	3	4	5	6	7	8	9	10
0	0	0	0	0	0	0	0	0	0	0	0
1	0	0	0	0	0	0	0	0	0	0	0
2	0	0	0	0	0	0	0	0	0	0	0
3	0	0	0	0	0	0	0	0	0	0	0
4	0	0	0	0	0	0	0	0	0	0	0
5	0	0	0	0	0	0	0	0	0	0	0
6	-0.067	-0.087	-0.085	-0.0743	-0.0608	-0.04775	-0.0364	-0.0272	-0.02	-0.0145	-0.01
7	-0.0698	-0.11	-0.125	-0.1177	-0.1011	-0.0824	-0.065	-0.0496	-0.037	-0.0277	-0.0203
8	-0.0396	-0.0711	-0.093	-0.0921	-0.080	-0.064	-0.045	-0.036	-0.826	-0.0186	-0.0125
9	-0.0192	-0.0376	-0.0534	-0.054	-0.0456	-0.0320	-0.0210	-0.0115	-4E-3	-5E-4	1.9E-3
10	-0.0137	-0.0281	-0.8407	-0.0426	-0.0318	-0.0263	-0.0155	-6E-3	-6.1E-3	3E-3	5.1E-3

TABLE 9.6 UNIT PULSE DIFFERENCE MATRIX $\{\Delta h_6(n_1,n_2)\}$

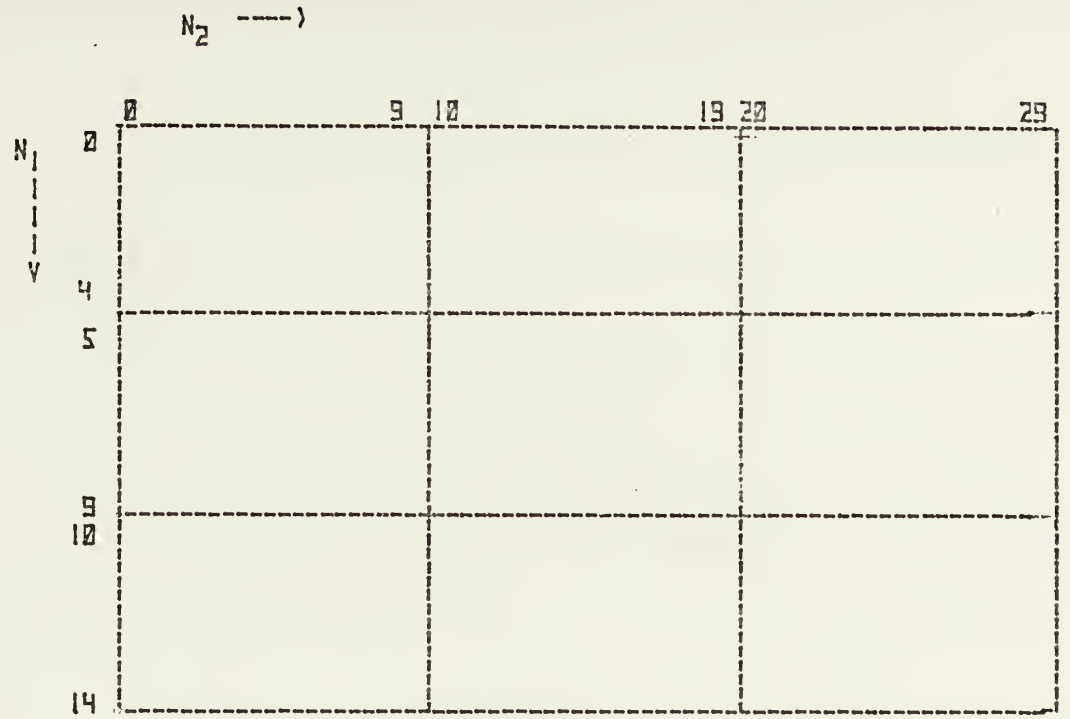

FIG.9.4: PARTITIONING OF TWO-DIMENSIONAL UNIT PULSE RESPONSE. $\bar{R}=(4,9)$

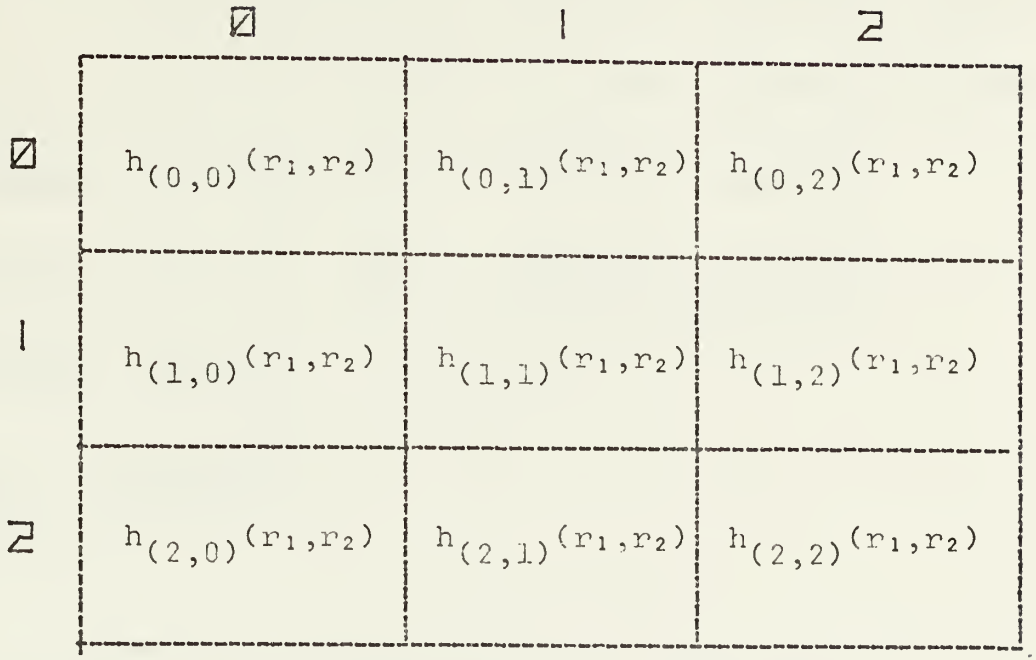

FIG.9.5: DESIGNATION OF TWO-DIMENSIONAL UNIT PULSE RESPONSE.

n_1 \ n_2	0	1	2	3	4	5	6	7	8
0	1.0	.146	.057316	1.013624	-.0669475	.1261231	.9829059	.1363234	.0311823
1	.238	-.230504	5.76E-3	.1834959	.0809231	.0366251	-.2138233	.2794034	.0817975
2	1.056644	-.0179899	.1358517	1.0378	.8443034	.6598764			
3	.1304813	.3402934	.1502827	.0500	-.3010471	-.5302001			
4	1.0168975	-.3264886	.3657731						
5	-.1076347	.7315	-.466621						

TABLE 9.7 GIVEN UNIT SAMPLE RESPONSE MATRIX $\{h(n_1,n_2)\}$

n_1 \ n_2	0	1	2	3	4	5	6	7	8
0	0	0	0	1.0	-.071	.125041	.9826021	.1362401	.0311591
1	0	0	0	.196	.082168	.0373841	-.2136625	.2794595	.0818124
2	1.0	.1	.066	1.050616	.8398534	.6602579			
3	.117	.3834	.100614	.0754487	-.3082756	-.5281304			
4	1.013689	-.3126533	.3421021						
5	-.1083984	.7356447	-.4760233						

TABLE 9.8 UNIT PULSE DIFFERENCE MATRIX $\{\Delta h_0(n_1,n_2)\}$

$n_2 \longrightarrow$

n_1 ↓	0	1	2	3	4	5	6	7	8
0	0	0	0	0	0	0	1.0	.12	.0344
1	0	0	0	0	0	0	-.231	.27456	.0789808
2	0	0	0	1.0	.8	.64			
3	0	0	0	.01	-.336	-.543			
4	1.0	-.401	.181301						
5	-.11	.72022	-.5284383						

TABLE 9.9 UNIT PULSE DIFFERENCE MATRIX $\{\Delta h_1(n_1,n_2)\}$

H_{00}:

r_1=0	r_2=0	1	2
	1	.146	.036
1	.238	-.3	.061

Table 9.10a

H_{10}:

	1	-.401	.0205
	.117	.36	.012

Table 9.10b

H_{01}:

	1	-.071	.12
	.196	.11	.003

Table 9.10c

H_{20}:

	1	-.401	.0205
	-.11	.632	.036

Table 9.10d

H_{11}:

	1	.8	0
	.01	-.352	.001

Table 9.10e

H_{02}:

	1	.12	.02
	-.231	.33	.19

Table 9.10f

TABLE 9.10: EXTRACTED SET OF COEFFICIENTS

$$\left\{ a^{(j_1,j_2)}_{(r_1,r_2)} \right\}_I \quad , \quad \text{for} \quad I = 0,1,2$$

X. DESIGN OF N-DIMENSIONAL RECURSIVE FILTER

A. INTRODUCTION

The time domain design of recursive digital filters is achieved by selection of transfer function coefficients such that the corresponding unit sample response approximates a given one and by checking the stability of the resulting transfer function. Both steps of the time domain design procedure have been developed: the selection of coefficients by extraction techniques in Chapters VIII and IX, methods to analyze stability in Chapters V, VI, and VII. At this point it is necessary to establish a measure of quality for the approximation step. All approximation procedures produce a transfer function $H(\bar{z})$, such that the associated unit pulse respone has identically the same entries as the given unit sample response $\{h(\bar{n})\}$, where $0 \leq n_i \leq I_i$, for the first $\bar{k}$ terms, where $k_i \leq I_i$. The quality of approximation will be identified by comparing the magnitude squared spectra of the given unit sample response to the magnitude squared spectra of the extracted transfer function.

In the following section three design examples are given to illustrate this measure of quality. In Section C several aspects of frequency domain design are discussed and the applicability of stability analysis as well as approximate partial fraction expansion techniques are pointed out.

Finally, areas for further research based on the presented techniques are outlined in the summary at the end of this chapter.

B. TIME-DOMAIN DESIGN EXAMPLES

1. Example 10.1: All-Pole Transfer Function

From a given unit sample response $\{h(\bar{n})\}$, $0 \leq n_i \leq I_i$, an all-pole transfer function is extracted using the algorithm of Section C in Chapter IX (Fig 9.1). The order of the approximating $H(\bar{z})$ is chosen by comparing the quality of approximation in the frequency domain. The stability of the resulting recursive digital filter is analyzed with conditions given in Chapters V to VII.

Given a unit sample response $\{h(n_1,n_2)\}$, $(0 \leq n_i \leq 25)$, it is observed that the magnitude squared spectrum is symmetric, i.e. $|H(\omega_p,0)|^2 = |H(0,\omega_p|^2$ for all ω_p, which is shown in Fig 10.1 (for $0 \leq \omega_p \leq \pi$). The application of the all-pole extraction technique for $0 \leq n_i \leq 1$ leads to a bilinear transfer function $H(z_1,z_2)$, where

$$H(z_1,z_2) = \frac{1}{1 - \alpha_{10}z_1^{-1} - \alpha_{01}z_2^{-1} - \alpha_{11}z_1^{-1}z_2^{-1}} \quad . \qquad (10.1)$$

The transfer function coefficients are listed in table 10.1a. The extraction of a fourth-order transfer function of the form

$$H(z_1,z_2) = \frac{1}{1 - \alpha_{10}z_1^{-1} - \alpha_{01}z_2^{-1} - \alpha_{11}z_1^{-1}z_2^{-1} - \alpha_{20}z_1^{-2}}$$

$$\frac{}{- \alpha_{11}z_1^{-1}z_2^{-1} - \alpha_{02}z_1^{-2} - \alpha_{21}z_1^{-2}z_2^{-1}}$$

$$\frac{}{- \alpha_{12}z_1^{-1}z_2^{-2} - \alpha_{22}z_1^{-2}z_2^{-2}} \qquad (10.2)$$

(Coefficients in Table 10.1b.) The corresponding magnitude squared spectra are observed to be symmetric and the comparison in Fig 10.1 along the ω_1-axis shows that the fourth-order approximation has good quality. The transfer functions in eq (10.1), (10.2) are identified to be stable by Tables 7 and 6.1, respectively.

2. Example 10.2: Rational Transfer Function

For a given $h(\bar{n})$, $0 \leq n_i \leq I_i$, a rational transfer function is formed by solving

$$P = \prod_{i=1}^{N} (P_i+1)$$

linear equations, where $0 \leq P_i \leq I_i$, and $P = L + M$ as defined in eqs (9.8), (9.9).

For a given $\{h(n_1,n_2)\}$, $0 \leq n_i \leq 25$ the associated symmetric magnitude squared spectrum is shown in Fig 10.2. The second order approximation

$$H(z_1,z_2) = \frac{\beta_{00} + \beta_{10}z_1^{-1} + \beta_{01}z_2^{-1} + \beta_{11}z_1^{-1}z_2^{-1}}{1 - \alpha_{10}z_1^{-1} - \alpha_{01}z_2^{-1} - \alpha_{11}z_1^{-1}z_2^{-1}} \qquad (10.3)$$

and the fourth order approximation by

$$H(z_1,z_2) = \frac{\beta_{00} + \beta_{10}z_1^{-1} + \beta_{01}z_2^{-1} + \beta_{11}z_1^{-1}z_2^{-1} + \beta_{20}z_1^{-2}}{1 - \alpha_{10}z_1^{-1} - \alpha_{01}z_2^{-1} - \alpha_{11}z_1^{-1}z_2^{-1} - \alpha_{20}z_1^{-2}}$$

$$\frac{+ \beta_{02}z_2^{-2} + \beta_{21}z_1^{-2}z_2^{-1} + \beta_{12}z_1^{-1}z_2^{-2} + \beta_{22}z_1^{-2}z_2^{-2}}{- \alpha_{02}z_2^{-2} - \alpha_{21}z_1^{-2}z_2^{-1} - \alpha_{12}z_1^{-1}z_2^{-2} - \alpha_{22}z_1^{-2}z_2^{-2}} \qquad (10.4)$$

for which the coefficients are listed in table 10.2, result in symmetric spectra, which are shown in Fig. 10.2. Again the fourth order transfer function gives a good approximation The stability of the two transfer functions is identified by applying Tables 7 and 6.1, respectively.

3. Example 10.3: Parallel Arrangement of Low Order Transfer Functions

The transfer function extraction is achieved using the algorithms in Fig 9.6 as well as the all-pole extraction algorithm or rational extraction method described previously. The given unit sample response is partitioned and redesignated, as explained in section E, Chapter IX. For the unit sample response given in example 10.1 the partitioning is made into bilinear sections. The second order approximation is

necessarily identical to the one in example 10.1. The approximation by three bilinear sections, i.e.,

$$H(z_1,z_2) = H_{(0,0)}(z_1,z_2) + H_{(1,0)}(z_1,z_2)z_1^{-2} + H_{(0,1)}(z_1,z_2)z_2^{-2} ,$$

for which the coefficients are listed in Table 10.3a, has a magnitude squared spectrum shown in Fig 10.3. The stability of each section is verified by application of Table 7.

It is noted that the approximation by one fourth order all-pole section, as derived in example 10.1, exhibits a much better quality than the approximation by three second-order parallel transfer functions.

4. Discussion

All of the discussed design techniques do not lead to a locally optimal solution, as an iterative technique will, but they produce a viable solution in a comparatively short time. It is noted that the rational transfer function extraction technique for a numerator polynomial equal to a constant and the all-pole transfer function extraction algorithm produce identical results.

C. COMMENTS ON FREQUENCY-DOMAIN DESIGN TECHNIQUES FOR RECURSIVE DIGITAL FILTER

The availability of a general method to derive stability conditions in N-dimensions will remove one of the major obstacles to solve frequency domain design problems. Also,

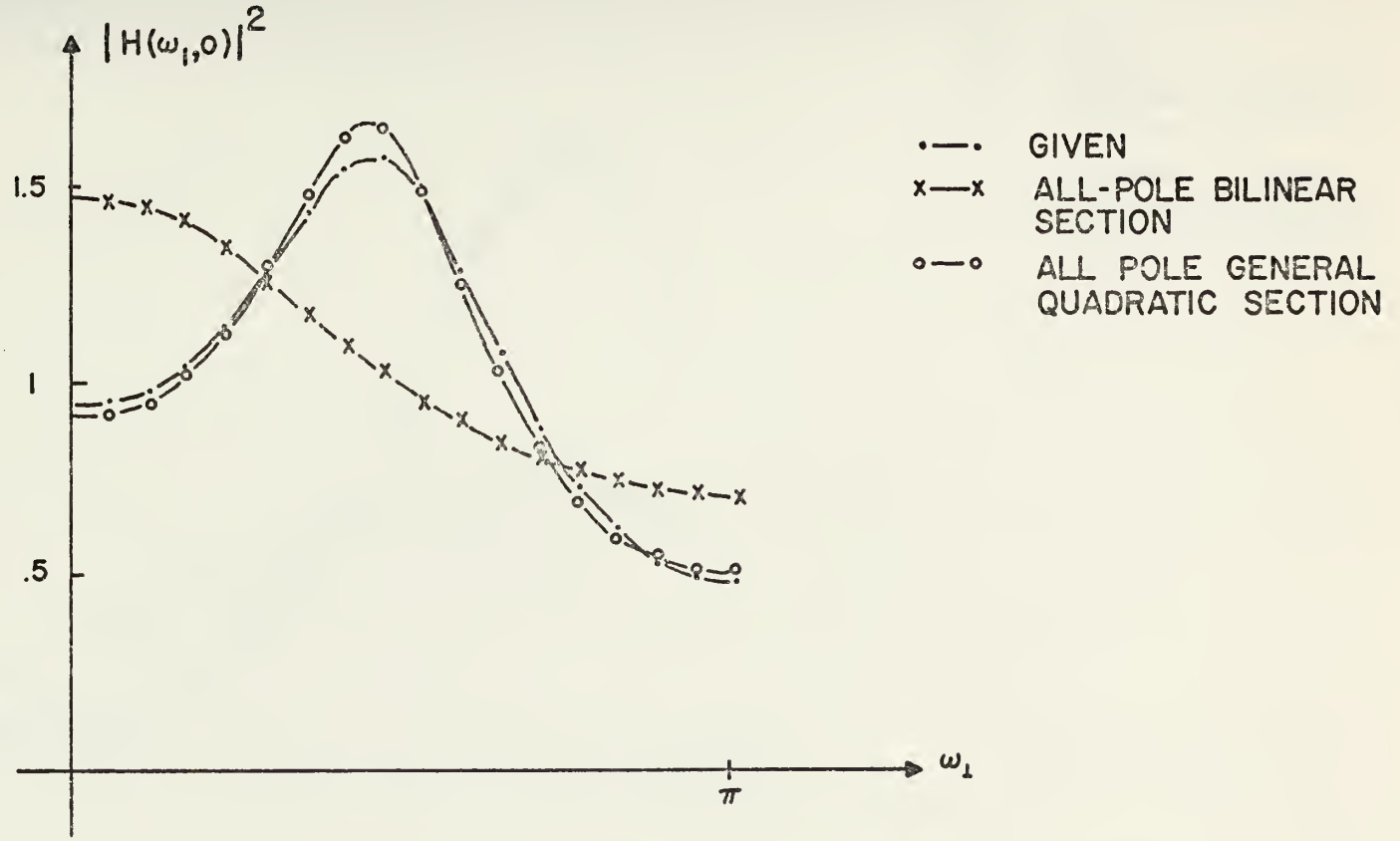

FIG 10.1: MAGNITUDE SQUARED SPECTRA COMPARISON (ALL POLE TRANSFER FUNCTION EXTRACTION TECHNIQUE)

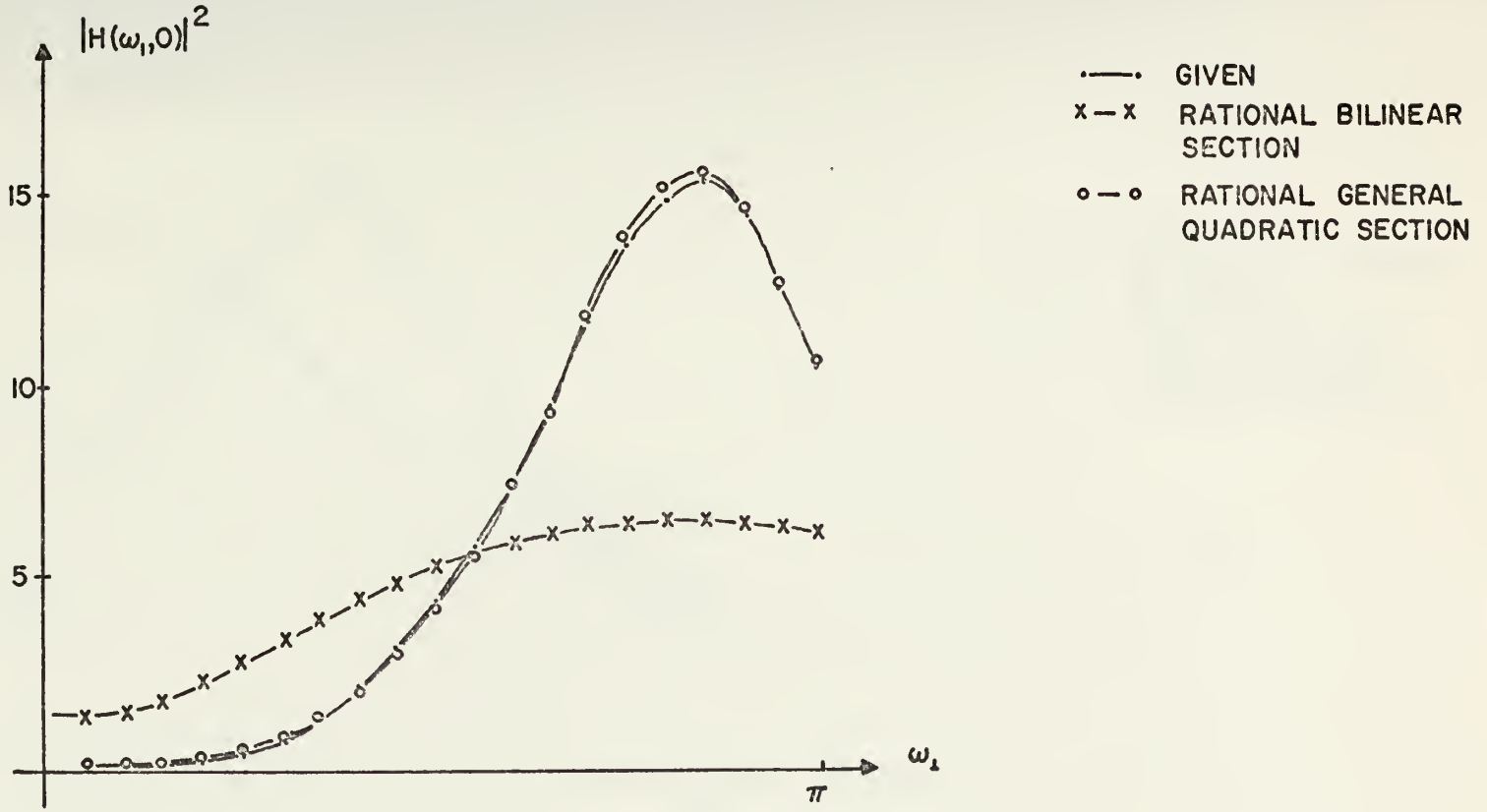

FIG. 10.2: MAGNITUDE SQUARED SPECTRA COMPARISON (RATIONAL TRANSFER FUNCTION EXTRACTION TECHNIQUE)

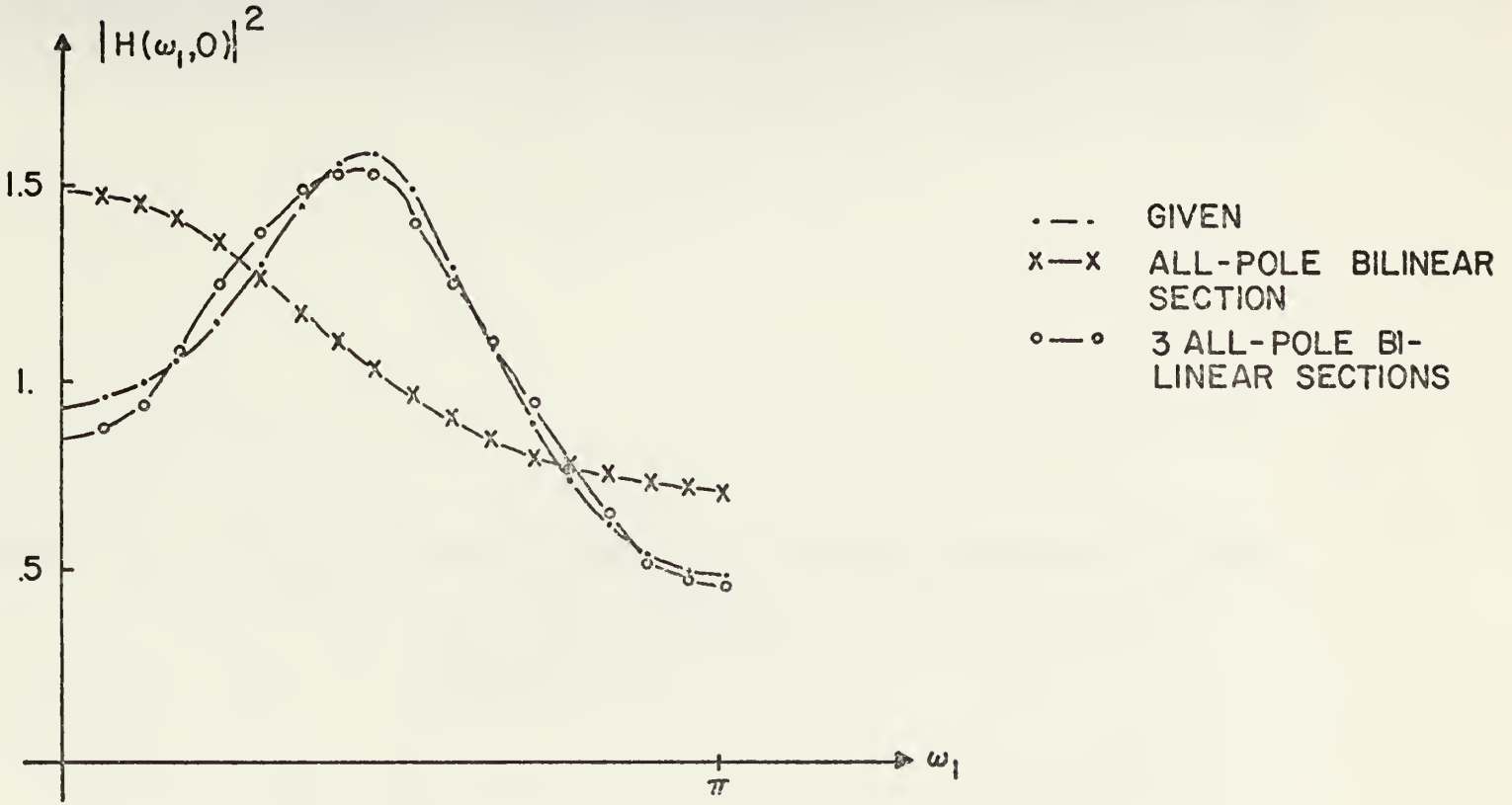

FIG. 10.3 : MAGNITUDE SQUARED SPECTRA COMPARISON (PARALLEL ARRANGEMENT OF LOW ORDER SECTIONS.)

	$m_2=0$	$m_2=1$
$m_1=0$	1.0	.175388
$m_1=1$	.175388	.020761

(10.1a)

	$m_2=0$	$m_2=1$	$m_2=2$
$m_1=0$	1.0	.175388	-.210655
$m_1=1$	.175388	.030761	-.036946
$m_1=2$	-.210655	-.036946	.044376

(10.1b)

TABLE 10.1: $\{\alpha_{m_1 m_2}\}$ COEFFICIENTS FOR EXTRACTED ALL-POLE BILINEAR AND GENERAL QUADRATIC TRANSFER FUNCTION (EXAMPLE 10.1)

	$\ell_2=0$	$\ell_2=1$
$\ell_1=0$	1	-2
$\ell_1=1$	-2	4

	$\ell_2=0$	$\ell_2=1$	$\ell_2=2$
$\ell_1=0$	1	-2	1
$\ell_1=1$	-2	4	-2
$\ell_1=2$	1	-2	1

	$m_2=0$	$m_2=1$
$m_1=0$	1.0	.1826439
$m_1=1$	.1826439	.0333587

(10.2a)

	$m_2=0$	$m_2=1$	$m_2=2$
$m_1=0$	1.0	.1826439	.1638521
$m_1=1$	.1826439	.0333587	.0299266
$m_1=2$	.163852	.0299266	.0268475

(10.2b)

TABLE 10.2: $\{\beta_{\ell_1\ell_2}\}$, $\{\alpha_{m_1m_2}\}$ COEFFICIENTS FOR EXTRACTED RATIONAL BILINEAR AND GENERAL QUADRATIC TRANSFER FUNCTION (EXAMPLE 10.2)

	$m_2=0$	$m_2=1$
$m_1=0$	1.	.175388
$m_2=1$	.175388	.030761

$H_{(0,0)}$

	$m_2=0$	$m_2=1$
$m_1=0$	1.	.2531023
$m_1=1$	.2531023	.0640679

$H_{(1,0)}$; $H_{(0,1)}$

Scaling coefficient: -.2106014

TABLE 10.3: $\{\alpha_{m_1 m_2}\}$ COEFFICIENTS FOR EXTRACTED PARALLEL ARRANGEMENT OF ALL-POLE BILINEAR TRANSFER FUNCTION (EXAMPLE 10.3)

the possibility of approximating a high order transfer function by a parallel arrangement of low order functions allows the realization of complicated systems similar to the use of canonical sections in one dimension.

D. SUMMARY

The N-dimensional time-domain design techniques represent a step towards the use of recursive techniques to perform multi-dimensional filtering. Based on the theory of structures, stability analysis and design methods, future research is suggested to develop frequency domain design techniques, to generalize Parker, Girard, Souchon's [42] study of effects of correlation and structure on quantization noise to N-dimensions, and to formulate conditions for the existence and bounds of limit cycles in N-dimensional recursive digital filters.

APPENDIX A

GENERALIZED DIGITAL FILTER THEORY

N-dimensional linear digital filtering can be described in terms of N-dimensional Z-transforms.

A. DEFINITIONS

1. N-Dimensional Signal

Consider the signal x to be a function of N variables, i.e., $\tau_1,\ldots,\tau_N$, which span a N-dimensional space. A uniform mesh on this space is chosen such that the coordinates of any vertex of the mesh will be $(n_1T_1,n_2T_2,\ldots,n_NT_N)$, where $\bar{T} = (T_1,\ldots,T_N)$ are the mesh spacing along the $\tau_1,\ldots,\tau_N$ axes, respectively. Any vertex can be identified by the coordinates

$$(\bar{n}) = (n_1,\ldots,n_N) \quad , \tag{A.1}$$

where $(\bar{T}) = (\bar{1})$ and the signal at that knot is denoted as $x(\bar{n})$. $\{x(\bar{n})\}$ is defined to be an N-dimensional sequence, where each $-\infty \leq n_i \leq \infty$.

2. Linear, Shift-Invariant, Causal System

A system is defined mathematically by a unique transformation or operator P that maps an input sequence $x(\bar{n})$ into an output sequence $y(\bar{n})$, i.e.,

$$y(\bar{n}) = P[x(\bar{n})]$$

An N-dimensional system is linear if the principle of superposition holds, i.e.,

$$P[ax_1(\bar{m}) + bx_2(\bar{m})] = aP[x_1(\bar{m})] + bP[x_2(\bar{m})]$$

A shift-invariant system is characterized by the property that if $y(\bar{n})$ is the response of $x(\bar{n})$, then $y(\bar{n}-\bar{m})$ is the response of $x(\bar{n}-\bar{m})$, where

$$(\bar{n}-\bar{m}) \equiv (n_1-m_1, n_2-m_2, \ldots, n_N-m_N) \quad .$$

A system is realizable or causal if changes in the output do not precede changes in the input. If $U_0(\bar{n})$ is the N-dimensional unit sample defined by

$$U_0(\bar{n}) \equiv \begin{cases} 1 & \text{if } n_1 = n_2 = \ldots = n_N = 0 \\ 0 & \text{otherwise,} \end{cases} \qquad (A.2)$$

then the unit sample response, i.e.,

$$h(\bar{n}) = P(U_0(\bar{n}))$$

of a linear, shift-invariant causal system is zero whenever at least one component of $(\bar{n})$ is less than zero.

3. Convolution

A linear shift-invariant system* is completely characterized by its unit sample response $h(\bar{n})$, i.e., the response to the input $x(\bar{m})$ is

$$y(\bar{n}) = \sum_{\substack{\bar{m} \\ (-\infty<m_i<\infty)}} x(\bar{m})h(\bar{n}-\bar{m}) = \sum_{\substack{\bar{m} \\ (-\infty<m_i<\infty)}} h(\bar{m})x(\bar{n}-\bar{m}) \quad (A.3)$$

where

$$\sum_{\substack{\bar{m} \\ (-\infty<m_i<\infty)}} \equiv \sum_{m_1=-\infty}^{\infty} \sum_{m_2=-\infty}^{\infty} \cdots \sum_{m_N=-\infty}^{\infty} \quad (A.4)$$

Equation (A.3) defines N-dimensional convolution and will also be represented by $y(\bar{n}) = x(\bar{n}) * h(\bar{n})$.

The difficulty of applying eq (A.3) in two-dimensions in all but the simplest cases is illustrated by Rabiner and Gold [2] and can be interpreted as an omen of some of the inherent problems in working with multidimensional systems.

---

*For causal system the lower limit is zero.

4. Separability

A system is said to be separable if its unit pulse response $h(\bar{n})$ can be factored into a product of one dimensional sequences, i.e.,

$$h(\bar{n}) = \prod_{i=1}^{N} h_i(n_i) \qquad \text{(A.5a)}$$

The advantage of a separable filter is that the multidimensional convolution for a separable input can be carried out as a sequence of one dimensional convolutions. This follows from rewriting eq (A.3), for

$$h(\bar{m}) = \prod_{i=1}^{N} h_i(m_i)$$

and

$$x(\bar{n}) = \prod_{i=1}^{N} x_i(n_i)$$

as

$$y(\bar{n}) = \sum_{(-\infty \le m_i \le \infty)} \left[\prod_{i=1}^{N} h_i(m_i) \right] \left[\prod_{i=1}^{N} x_i(n_i - m_i) \right]$$

which equals

$$= \left[\sum_{m_1=-\infty}^{\infty} h_1(m_1) x_1(n_1 - m_1) \right] \left[\sum_{m_2=-\infty}^{\infty} h_2(m_2) x_2(n_2 - m_2) \right]$$

$$\cdots \left[\sum_{m_N=-\infty}^{\infty} h_N(m_N) x_N(n_N - m_N) \right] \quad \text{q.e.d.} \qquad (A.5b)$$

B. Z-TRANSFORM

1. Definition

The N-dimensional two-sided Z-transform $X(\bar{z})$, where $(\bar{z}) = (z_1, z_2, \ldots, z_N)$, of the N-dimensional input sequence $x(\bar{n})$ is defined by

$$X(\bar{z}) = Z(x(\bar{n})) \equiv \sum_{\substack{\bar{n} \\ (-\infty \le n_i \le \infty)}} x(\bar{n}) \cdot z^{-\bar{n}} \qquad (A.6)$$

where $z^{-\bar{n}} \equiv z_1^{-n_1} \cdot z_2^{-n_2} \cdots z_N^{-n_N}$ and the z_i's are complex variables, which, expressed in polar form,

$$z_i = r_i e^{j\omega_i} ,$$

where ω_i is the i^{th} spatial frequency variable and can be used to rewrite eq (A.6) as

$$X(\bar{z}) = \sum_{\substack{\bar{n} \\ (0 \leq n_1 \leq \infty)}} x(\bar{n}) \left(r_1^{-n_1} e^{-jn_1\omega_1}\right)\left(r_2^{-n_2} e^{-jn_2\omega_2}\right) \cdots \left(r_N^{n_N} e^{-jn_N\omega_N}\right)$$

Similarly to the one-dimensional case, the N-dimensional Z-transform can be interpreted as the N-dimensional Fourier transform of $x(\bar{n})$, whenever

$$r_i = |z_i| = 1$$

For convergence of the N-dimensional Z-transform, the sequence $x(\bar{n})\, z^{-\bar{n}}$ must be absolutely summable. This is equivalent to

$$\sum_{\substack{\bar{n} \\ (-\infty \leq n_i \leq \infty)}} |x(\bar{n}) r^{-\bar{n}}| < \infty \qquad (A.7)$$

The set of z_i, for which eq (A.7) holds, defines the region of convergence. Notice that because of the multiplication of the sequence $x(\bar{n})$ by $r^{-\bar{n}}$, it is possible for the Z-transform to converge, even if the Fourier transform does not.

2. Properties

Properties of the N-dimensional Z-transform which are needed in subsequent chapters are derived as extensions of the well-known one- and two-dimensional cases. The proofs are omitted whenever they follow directly from the definition of the N-dimensional Z-transform. The properties of the N-dimensional Z-transform are summarized in Table A

a. Linearity

$$Z[a\, x(\bar{m}) + b\, y(\bar{m})] = a\, Z[x(\bar{m})] + b\, Z[y(\bar{m})]$$

where a and b are constants.

b. Shifting

If $y(\bar{m}) = x(\bar{m}-\bar{p})$

then

$$Y(z) = z^{-\bar{p}}\, X(z)$$

c. Convolution

If $y(\bar{n})$ is equal to the convolution of two N-dimensional sequences $x(\bar{n})$ and $h(\bar{n})$, then the Z-transform of $y(\bar{n})$ is equal to the product of the Z-transforms of $x(\bar{n})$ and $h(\bar{n})$, i.e.,

$$y(\bar{n}) = \sum_{\substack{\bar{m} \\ (-\infty<\underline{m}_i<\infty)}} x(\bar{m})\ h(\bar{n}-\bar{m})$$

then

$$Y(\bar{z}) = X(\bar{z}) \cdot H(\bar{z}) .$$

This can easily be seen by writing

$$Y(\bar{z}) = \sum_{\substack{\bar{n} \\ (-\infty<\underline{n}_i<\infty)}} \left\{ \sum_{\substack{\bar{m} \\ (-\infty<\underline{m}_i<\infty)}} x(\bar{m})\ h(\bar{n}-\bar{m}) \right\} z^{-\bar{n}}$$

and after interchanging the order of summation and changing the indices of summation, this becomes

$$Y(\bar{z}) = \sum_{\substack{\bar{m} \\ (-\infty<\bar{m}_i<\infty)}} x(\bar{m}) \left\{ \sum_{\substack{\bar{k} \\ (-\infty<\bar{k}_i<\infty)}} h(\bar{k})\ z^{-\bar{k}} \right\} z^{-\bar{m}}$$

which is equal to

$$Y(\bar{z}) = X(\bar{z}) \cdot H(\bar{z})$$

3. Inverse Z-Transform

The inversion formula for the above transform is given by

$$x(\bar{m}) = \frac{1}{(2\pi j)^N} \oint_{\bar{C}_N} \cdots \oint X(\bar{z})\, z^{(\bar{m}-\bar{1})}\, d\bar{z} \qquad (A.8)$$

where the N paths of integration $\bar{C}_N$ are within the regions of convergence of eq (A.8) and $d\bar{z} \equiv dz_1 \cdot dz_2 \cdots dz_N$. This formula follows by substituting $X(\bar{z})$ in eq (A.6) , which becomes

$$x(\bar{m}) = \frac{1}{(2\pi j)^N} \oint_{\bar{C}_N} \cdots \oint \sum_{\substack{\bar{n} \\ (-\infty \le n_i \le \infty)}} x(\bar{n})\, z^{-\bar{n}}\, z^{(\bar{m}-\bar{1})}\, d\bar{z}$$

The interchange of summations and integrations, which is justified by the absolute convergence of the series for $X(z)$, yields

$$x(\bar{m}) = \frac{1}{(2\pi j)^N} \sum_{\substack{\bar{n} \\ (-\infty \le n_i \le \infty)}} x(\bar{n}) \oint_{\bar{C}_N} \cdots \oint z^{(-\bar{n}+\bar{m}-\bar{1})} \, d\bar{z}$$

By the Cauchy Integral Theorem of N-variables and since the paths of integration $\bar{C}_N$ are chosen within the region of convergence, it follows that

$$\oint_{\bar{C}_N} \cdots \oint z^{(\bar{n}-\bar{m}-\bar{1})} \, d\bar{z} = \begin{cases} (2\pi j)^N & \text{if } (\bar{m}-\bar{n}) = (\bar{0}) \\ 0 & \text{otherwise} \end{cases}$$

C. RECURSIVE EQUATION

An important subclass of linear, shift-invariant N-dimensional filters is constituted of those systems for which the input and output satisfy a linear, constant-coefficient difference equation of the form:

$$y(\bar{n}) = \sum_{\substack{\bar{m} \\ (0 \le m_i \le M_i)}} a_{(\bar{m})} \, y(\bar{n}-\bar{m}) + \sum_{\substack{(\bar{\ell}) \\ (0 \le \ell_i \le L_i)}} b_{(\bar{\ell})} x(\bar{n}-\bar{\ell}) \qquad \text{(A.9)}$$

where $\sum_{i=1}^{N} m_i \neq 0$

with $a_{(\bar{m})} \equiv a_{(m_1,\ldots,m_N)}$

and $b_{(\bar{\ell})} = b_{(\ell_1,\ldots,\ell_N)}$

are the sets of constant coefficients which characterize a particular filter.

Equation (A.9) does not uniquely specify the input-output relationship of a system. This is a consequence of the fact that as with differential equations, a family of solutions may exist. Therefore, a set of initial conditions must also be specified.

It is assumed that if a system satisfies a linear-constant coefficient N-dimensional difference equation, it will also be shift-invariant.

If the set of all $a_{(\bar{m})}$ is non-empty for all m_i such that

$$\sum_{i=1}^{N} m_i \neq 0 \quad ,$$

then eq (A.9) characterizes a recursive system algorithm and may be used as a computational realization of the system, either by programming a general purpose digital computer or by implementation using special purpose hardware.

D. TRANSFER FUNCTION

Taking the Z-transform of the N-dimensional linear difference equation, eq (A.9), leads to

$$Y(\bar{z}) = H(\bar{z})\ X(\bar{z})$$

where

$$H(\bar{z}) = \frac{\sum\limits_{\bar{\ell}}\sum\limits_{(0\le \ell_i \le L_i)} b_{(\bar{\ell})}\ z^{-\bar{\ell}}}{1 - \sum\limits_{\bar{m}}\sum\limits_{(0\le m_i \le M_i,\ \sum_{i=1}^{N} m_i \neq 0)} a_{(\bar{m})}\ z^{-\bar{m}}} \qquad \text{(A.10)}$$

Note $\sum\limits_{i=1}^{N} m_i = 0$ implies $m_1 = 0, \ldots, m_N = 0$

Equation (A.10) is shown in Table A.2 in long hand notation.

The order of $H(\bar{z})$ is defined as the sum of all M_i, i.e.,

$$\text{order } H(\bar{z}) \equiv \sum_{i=1}^{N} M_i \qquad \text{(A.11a)}$$

The degree of $H(\bar{z})$ is defined as follows:

$$\text{Degree } H(\bar{z}) = \max_{\text{all } i} (M_i) \tag{A.11b}$$

A coefficient $a_{(i)}$ of the N-variable characteristic equation is called a leading coefficient, if its order equals the order of $H(\bar{z})$. Note that there may be several leading coefficients.

For $H(\bar{z})$ as defined in eq (A.10) with constant real coefficient and for a causal unit response sequence $h(\bar{n})$, with real entries,

$$\frac{\sum\limits_{\substack{\bar{\ell} \\ 0 \le \ell_i \le L_i}} b_{(\bar{\ell})} z^{-\bar{\ell}}}{1 - \sum\limits_{\substack{\bar{m} \\ (0 \le m_i \le M_i) \\ \sum_{i=1}^{N} m_i \neq 0}} a_{(\bar{m})} z^{-\bar{m}}} = \sum\limits_{\substack{\bar{n} \\ (0 \le n_i \le \infty)}} h(\bar{n}) z^{-n} \tag{A.12}$$

where the right hand side is the Taylor expansion of $H(\bar{z})$.

E. SEPARABLE TRANSFER FUNCTION

For a separable system, as defined in Section A.4, the transfer function $H(\bar{z})$ can be written for a separable input as

$$H(\bar{z}) = \prod_{i=1}^{N} H_i(z_i)$$

This is proven by taking the Z-transform of eq (A.5b).

$$H(z_1, z_2, \ldots, z_N) = \frac{\sum_{\ell_1=0}^{L_1} \sum_{\ell_2=0}^{L_2} \cdots \sum_{\ell_N=0}^{L_N} b_{(\ell_1, \ell_2, \ldots, \ell_N)} \, z_1^{-\ell_1} z_2^{-\ell_2} \cdots z_N^{-\ell_N}}{1 - \sum_{m_1=0}^{M_1} \sum_{m_2=0}^{M_2} \cdots \sum_{m_N=0}^{M_N} a_{(m_1, m_2, \ldots, m_N)} \, z_1^{-m_1} z_2^{-m_2} \cdots z_N^{-m_N}}$$

where $m_1 + m_2 + \cdots + m_N \neq 0$

TABLE A.2 EQUATION (A.10) IN LONG HAND NOTATION

Property	Sequence	Transform
Linearity	$a\ X(\bar{n}) + b\ Y(\bar{n})$	$a\ X(\bar{z}) + b\ Y(\bar{z})$
Shifting	$X(\bar{n}-\bar{m})$	$z^{-\bar{m}}\ X(\bar{z})$
Convolution	$X(\bar{n}) * Y(\bar{n})$	$X(\bar{z}) \cdot Y(\bar{z})$
Separability	$h(\bar{n}) = \prod_{i=1}^{N} h_i(n_i)$	$H(\bar{z}) = \prod_{i=1}^{N} H_i(z_i)$

TABLE A: SUMMARY OF PROPERTIES OF N-DIMENSIONAL Z-TRANSFORM

APPENDIX B

PROOF THAT MULTI-VARIABLE POLYNOMIALS CANNOT BE FACTORED IN GENERAL

To establish that multi-variable polynomials cannot be factored in general, it is sufficient to show the insolvability of the problem in one particular case [54]. If we assume $z_1^2 + z_2^2 + 1 = 0$ can be solved into a product of factors which are integral in z_1 and z_2, i.e.,

$$\begin{aligned} z_1^2 + z_2^2 + 1 &= (pz_1+qz_2+r)(p' z_1+q' z_2+r') \\ &= pp' z_1^2 + qq' z_2^2 + rr' \\ &+ (pq' + p' q)z_1 z_2 \\ &+ (pr' + p' r)z_1 \\ &+ (qr' + q' r)z_2 \end{aligned}$$

Since this is by hypothesis an identity, we can equate coefficients and obtain:

$$pp' = 1 \qquad (B.1) \qquad\qquad pq' + p' q = 0 \qquad (B.4)$$

$$qq' = 1 \qquad (B.2) \qquad\qquad pr' + p' r = 0 \qquad (B.5)$$

$$rr' = 1 \qquad (B.3) \qquad\qquad qr' + q' r = 0 \qquad (B.6)$$

First we observe that, on account of equations (B.1), (B.2), and (B.3), none of the six quantities, p, q, r, p', q', r' can be zero; and also $p' = \frac{1}{p}$, $q' = \frac{1}{q}$, $r' = \frac{1}{r}$. Thus, as a logical consequence of our hypothesis, we have, from (B.4). (B.5) and (B.6):

$$\frac{p}{q} + \frac{q}{p} = 0 \qquad \text{(B.7)}$$

$$\frac{p}{r} + \frac{r}{p} = 0 \qquad \text{(B.8)}$$

$$\frac{q}{r} + \frac{r}{q} = 0 \qquad \text{(B.9)}$$

and, from these again, if we multiply by pq, rp, and qr, respectively, we get

$$p^2 + q^2 = 0 \qquad \text{(B.10)}$$

$$p^2 + r^2 = 0 \qquad \text{(B.11)}$$

$$q^2 + r^2 = 0 \qquad \text{(B.12)}$$

Subtracting eq (B.12) from eq (B.11), we derive

$$p^2 - q^2 = 0 \qquad \text{(B.13)}$$

And from addition of eqs(B.10) and (B.13),

$$2p^2 = 0$$

From this it follows that p = 0, which is in contradiction with eq (B.1). Therefore, the solution in this case is impossible. q.e.d.

APPENDIX C
PROOF OF CONDITIONS FOR BIBO STABILITY*

Prove that,

$$S = \sum_{\substack{\bar{n} \\ (-\infty \le n_i \le \infty)}} |h(\bar{n})| < \infty \qquad (C.1)$$

is a necessary and sufficient condition for BIBO stability.

If eq (C.1) is true and if for a bounded input $x(\bar{n})$, i.e., $|x(\bar{n})| < M$ for all $(\bar{n})$, then

$$|y(\bar{n})| = \left| \sum_{\substack{\bar{m} \\ (-\infty \le m_i \le \infty)}} h(\bar{m})\, x(\bar{n}-\bar{m}) \right| \le$$

$$\le M \sum_{\substack{\bar{m} \\ (-\infty < m_i < \infty)}} |h(\bar{m})| < \infty \qquad (C.2)$$

Thus the output sequence is bounded. The converse is proved by showing that if $S = \infty$, then a bounded input can be found that will cause an unbounded output. Such an input is the sequence:

$$x(\bar{m}) = \begin{cases} 1 & \text{if } h(-\bar{m}) \ge 0 \\ -1 & \text{if } h(-\bar{m}) \le 0 \end{cases}$$

*This extends a proof in [2] to N-dimensions.

From eq (A.3), the output at $(\bar{n}) = (\bar{0})$ is

$$y(0) = \sum_{\substack{\bar{m} \\ (-\infty \leq m_i \leq \infty)}} x(\bar{m})\, h(-\bar{m}) = \sum_{\substack{\bar{m} \\ (-\infty \leq m_i \leq \infty)}} |h(-\bar{m})|$$

which is equal to

$$y(0) = \sum_{\substack{\bar{m} \\ (-\infty \leq m_i \leq \infty)}} |h(\bar{m})| = S$$

Therefore, if $S = \infty$, it follows that the output sequence is unbounded.

APPENDIX D

ULTRASPHERICAL POLYNOMIAL $C_n^{\nu}(x)$

The following paragraphs contain the derivation of some important characteristics of the Ultraspherical polynomials, which are based on several papers published by L. Gegenbauer before the turn of the century.

Gegenbauer defines the Ultraspherical polynomial $C_n^{\nu}(x)$ in the following manner [62]:

$$C_n^{\nu}(x) = 2^n \frac{(n+\nu-1)!}{(\nu-1)!\, n!} \quad .$$

$$\begin{vmatrix} x & 1 & 0 & 0 & \cdots & \cdots & 0 & 0 \\ \frac{1}{2(\nu+1)} & x & 1 & 0 & & \cdots & 0 & 0 \\ 0 & \frac{2\nu+1}{2(\nu+1)(\nu+2)} & 0 & 1 & & \cdots & 0 & 0 \\ \vdots & \vdots & \vdots & \vdots & & \vdots & \vdots & \vdots \\ 0 & 0 & 0 & 0 & & \cdots & x & 1 \\ 0 & 0 & 0 & 0 & & \cdots & \frac{(n-1)(n+2\nu-2)}{4(n+\nu-2)(n+\nu-1)} & x \end{vmatrix} \qquad (D.1)$$

A. Even/Odd Function Characteristics

Gegenbauer develops in [63] the following relationship of Ultraspherical polynomials:

$$n\, C_n^{\nu}(x) - 2(n+\nu-1)\, x\, C_{n-1}^{\nu}(x) + (n+2\nu-2)\, C_{n-2}^{\nu}(x) = 0 \qquad (D.2)$$

Differentiating $C_n^{\nu}(x)$ with respect to x, by differentiating eq (D.1) and by writing the resulting sum of the n determinants, as a determinant of $(n-1)^{st}$ order leads to

$$\frac{d}{dx}\,[C_n^{\nu}(x)] = 2\nu\, C_{n-1}^{\nu+1}(x) \qquad (D.3)$$

Similarly the r^{th} derivative becomes

$$\frac{d^r}{dx^r}\,[C_n^{\nu}(x)] = 2^r\, \frac{(r+\nu-1)!}{(\nu-1)!}\, C_{n-r}^{\nu+r}(x)$$

If we replace x by $(-x)$ in eq (D.1), then the determinant is multiplied by $(-1)^n$. Therefore the Ultraspherical polynomial exhibits even/odd function behavior for n even/odd respectively.

B. Derivation of Second Order Differential Equation to which $C_n^{\nu}(x)$ is a Particular Solution

Gegenbauer lists the following values of Ultraspherical polynomials evaluated at $x = 0,-1,1$, which are needed for the following derivation:

$$C_{2n+1}^{\nu}(0) = 0$$

$$C_n^{\nu}(1) = \frac{(n+2\nu-1)!}{(2\nu-1)!\ n!} \qquad (D.4)$$

$$C_n^{\nu}(-1) = (-1)^n\ C_n^{\nu}(1)$$

$$C_{2n}^{\nu}(0) = (-1)^n\ \frac{(n+\nu-1)!}{(\nu-1)!\ n!}$$

Gegenbauer shows in [63] that the following set of formulas can be found:

$$C_n^{\nu+1}(x) - C_{n-2}^{\nu+1}(x) = \frac{n+\nu}{\nu}\ C_n^{\nu}(x)$$

$$x\ C_{n-1}^{\nu+1}(x) - C_{n-2}^{\nu+1}(x) = \frac{n}{2\nu}\ C_n^{\nu}(x)$$

which can be written as

$$\frac{d}{dx}\ [C_{n+1}^{\nu}(x)] - \frac{d}{dx}[C_{n-1}^{\nu}(x)] = 2(n+\nu)\ C_n^{\nu}(x)$$

$$x\ \frac{d}{dx}\ [C_n^{\nu}(x)] - \frac{d}{dx}[C_{n-1}^{\nu}(x)] = n\ C_n^{\nu}(x)$$

and are used to prove the following equations:

$$2\nu(1-x^2)\ C_{n-1}^{\nu+1}(x) + nx\ C_n^{\nu}(x) - (n+2\nu-1)\ C_{n-1}^{\nu}(x) = 0 \qquad (D.5)$$

and

$$4\nu(\nu+1)(1-x^2)\, C_{n-2}^{\nu+2}(x) - 2\nu(2\nu+1)x\, C_{n-1}^{\nu+1}(x)$$

$$+ n(n+2\nu)\, C_n^{\nu}(x) = 0 \qquad \text{(D.6)}$$

From eq (D.6) is is observed that the Ultraspherical polynomial is a particular solution to the second order, linear differential equation:

$$(1-x^2)y'' - (2\nu+1)xy' + n(n+2\nu)y = 0 \qquad \text{(D.7)}$$

The identification of the differential equation (D.7) allows this to relate $C_n^{\nu}(x)$ to other polynomials. By choosing $\nu = 0$ eq (D.7) is solved by Chebyshev polynomials of the second kind. It is also observed that eq (D.7) is a degenerate case, i.e., $\alpha = \beta$ of the differential equation:

$$(1-x^2)y'' + [\beta - \alpha - (\alpha+\beta+2)x]y' + n(n+\alpha+\beta+1)y = 0$$

which is solved by Jacobi polynomials.

C. Roots of $C_n^{\nu}(x)$

It can be shown that the roots of $C_n^{\nu}(x)$ are real and distinct by assuming $x = x_1$ is a multiple root of the ultraspherical polynomial, which implies that the derivative of $C_n^{\nu}(x)$, i.e., $C_{n-1}^{\nu+1}(x)$ must also vanish. Equation (D.5) sums to zero if and only if C_{n-1}^{ν} is zero. Following the

same line of reasoning it can be shown that $x = x_1$ must be a root of <u>all</u> Ultraspherical polynomials, i.e., of $C_n^\nu(x)$, $C_{n-1}^\nu(x)$, ..., $C_0^\nu(x)$. But since $C_0^\nu(x) = 1$ it is concluded that Ultraspherical polynomials have no common roots and $C_n^\nu(x)$ has no multiple roots. It is easily identified from eq (D.4) that $x = \pm 1$ are not roots of $C_n^\nu(x)$.

The functions $\frac{d}{dx} C_n^\nu(x)$ and $C_{n-1}^\nu(x)$ have equal signs at the roots of $C_n^\nu(x)$ provided x is restricted to the interval -1 to 1; [65] . Gegenbauer treats the function

$$C_n^\nu(x),\ C_{n-1}^\nu(x),\ \ldots,\ C_0^\nu(x)$$

as a Sturm sequence which has, by eq (D.4), at $x = 1$ the same signs, and at $x = -1$ alternating signs.

It is therefore concluded that $C_n^\nu(x)$ has n real and distinct roots in the interval $-1, \ldots, +1$.

D. <u>Representation of $C_n^\nu(x)$ as a Finite Sum</u>

Equation (D.2) combined with the fact that $C_0^\nu(x) = 1$ can be shown [66] to lead to

$$C_n^\nu(\pm 1) = (\pm 1)^n \frac{(n+2\nu-1)!}{n!\ (2\nu-1)!}$$

which is a special case of

$$C_n^\nu(x) = \sum_{\lambda=0}^{[n/2]} (-1)^\lambda \frac{(n+\nu-\lambda-1)!\ (2x)^{n-2\lambda}}{\lambda!\ (n-2\lambda)!\ (\nu-1)!}$$

In Fig D.1 and Fig D.2 the Ultraspherical polynomial $C_n^{\nu}(x)$ is graphed for $n = 5$ and $\nu = .2(.2)1$ and $n = 2(1)5$ and $\nu = 5$ respectively.

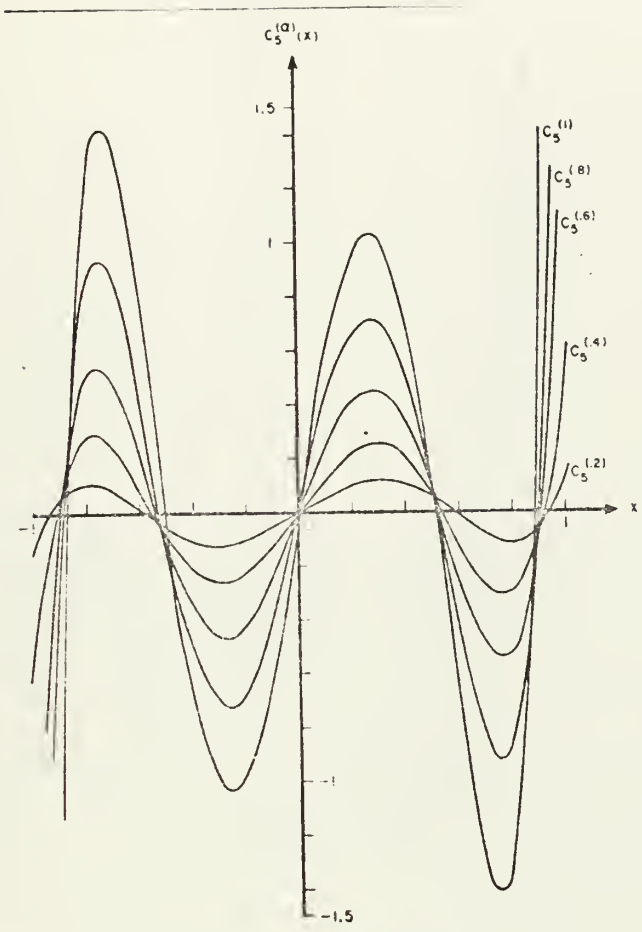

FIG D.1 ULTRASPHERICAL POLYNOMIALS $C_n^{\nu}(x)$,

$\nu = .2(.2)1$, $n = 5$

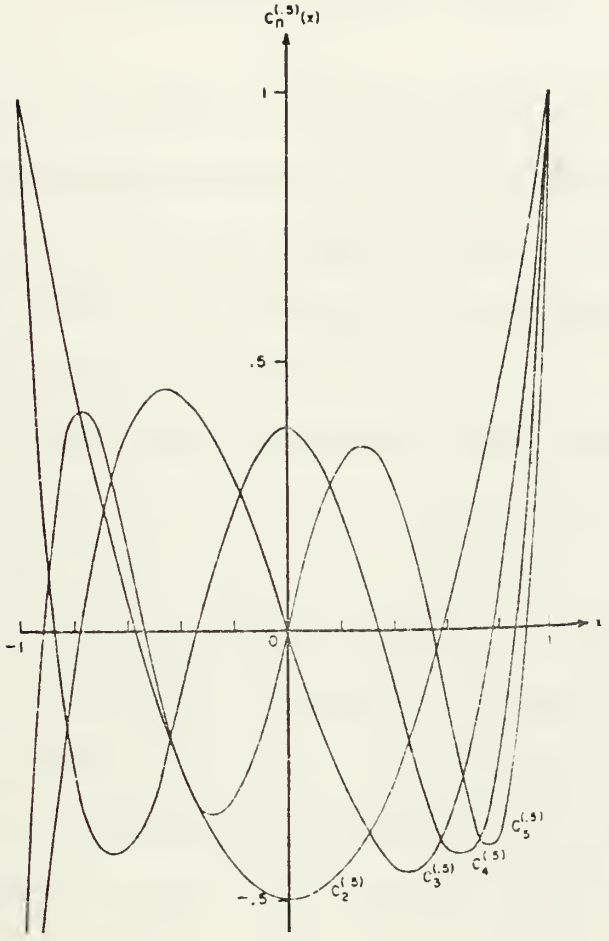

FIG D.2 ULTRASPHERICAL POLYNOMIALS $C_n^{\nu}(x)$,

$\nu = .5$, $n = 2(1)5$

APPENDIX E

MEMORY REQUIREMENTS FOR TWO-DIMENSIONAL RECURSIVE DIGITAL FILTER

Mitra et al. [67] have shown that the storage requirement of a two-dimensional digital filter realization does not only depend on the number of delays but also on the input output array sizes and on the computation sequence. This is best illustrated in the following example:

Consider the two-dimensional fourth order coupled filter block diagram in direct form 3 realization, as shown in Fig G.14, for $\alpha_{20} = \beta_{20} = 0$. Figure E shows the same realization in a way which graphically illustrates the computation and storage required. If the output is calculated row by row, the input must be read in row by row and elements of the preceding row of w's (defined in eq (1.2)) must be stored in order to calculate each new w value and hence each new output. After the w values in the preceding row have been used for the last time, they may be replaced by stored values of the new row. Therefore, memory required will be M+2 elements. If the output is computed column by column, then the memory required is 2N+1 elements.

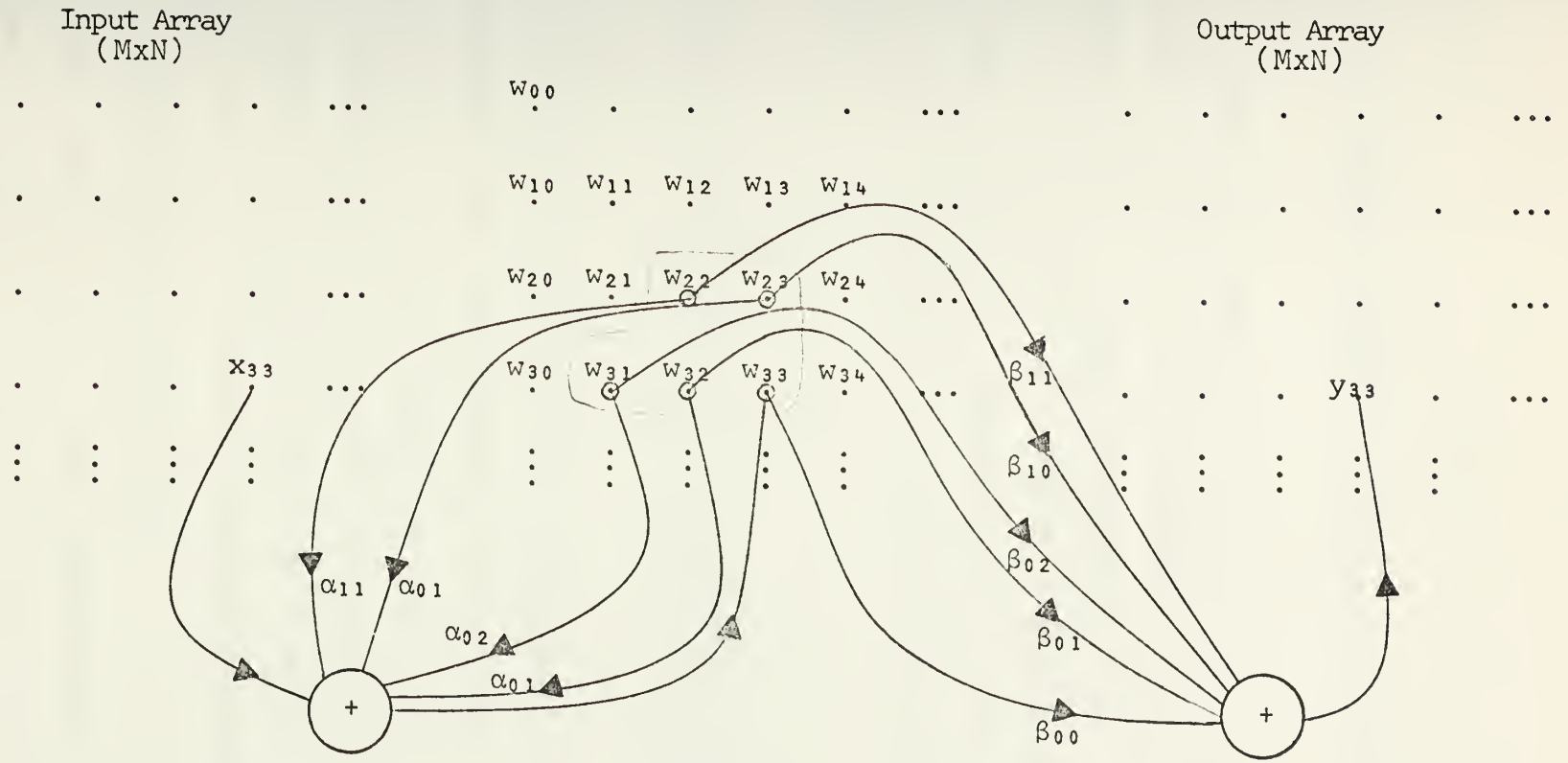

FIG.E : ALTERNATIVE DIAGRAM OF FIG G.14

APPENDIX F

METHOD TO DETERMINE CANONIC STRUCTURES FOR FULL QUADRATIC TRANSFER FUNCTION IN TWO DIMENSIONS

Parker and Hess published in [38] a procedure to derive canonic sections in one-dimension. This method can be generalized to the multidimensional case. The immense task of deriving canonic sections in N-dimensions is beyond the scope of this study. However, a method to derive canonic sections for a given full quadratic two-dimensional case, i.e.,

$$H(z_1,z_2) = \frac{\beta_{00} + \beta_{10}z_1^{-1} + \beta_{01}z_2^{-1} + \beta_{11}z_1^{-1}z_2^{-1} + \beta_{20}z_1^{-2} + \beta_{02}z_2^{-2}}{1 - \alpha_{10}z_1^{-1} - \alpha_{01}z_2^{-1} - \alpha_{11}z_1^{-1}z_2^{-1} - \alpha_{20}z_1^{-2} - \alpha_{02}z_2^{-2}} \qquad (F.1)$$

is outlined in the following paragraphs. It consists of a two-dimensional state equation formulation using tensor notation for the full quadratic case, which is then Z-transformed and solved for the underlying transfer function. A coefficient comparison with the transfer function (F.1) can then be used to develop canonic sections.

A. STATE EQUATION FORMULATION

The general set of state equations describing the one-dimensional digital filter, in which the state variables are labeled X, the subscript identifying the state variable

and the argument its value at a particular instant of discrete time, has the form [31]:

$$\underline{X}(n) = \underline{\overline{A}}\,\underline{X}(n-1) + \underline{U}(n) \qquad \text{(F.2)}$$

where $\underline{\overline{A}}$ is a square coefficient matrix and

$$\underline{X}(n) = [x_1(n)\ x_2(n)\ \ldots\ ]^t \qquad \text{(F.3a)}$$

and

$$\underline{U}(n) = [u_1(n)\ u_2(n)\ \ldots\ ]^t \qquad \text{(F.3b)}$$

are the state and input vectors, respectively.

If we extend the notation of equation (F.3) to two-dimensions we obtain:

$$\underline{\overline{X}}(n_1,n_2) = ((A))\,\underline{\overline{X}}(n_1-1,n_2) + ((B))\,\underline{\overline{X}}(n_1,n_2-1) + \underline{\overline{U}}(n_1,n_2) \qquad \text{(F.4)}$$

where

$$\underline{\overline{X}}(n_1,n_2) = \begin{bmatrix} x_{11}(n_1,n_2) & x_{12}(n_1,n_2) & x_{13}(n_1,n_2) & \cdots \\ x_{21}(n_1,n_2) & x_{22}(n_1,n_2) & \cdots & \cdots \\ x_{31}(n_1,n_2) & \cdots & \vdots & \cdots \\ \vdots & \vdots & \vdots & \vdots \end{bmatrix}$$

and

$$\underline{\bar{U}}(n_1,n_2) = \begin{bmatrix} u_{11}(n_1,n_2) & u_{12}(n_1,n_2) & u_{13}(n_1,n_2) & \cdots \\ u_{21}(n_1,n_2) & u_{22}(n_1,n_2) & \vdots & \cdots \\ u_{31}(n_1,n_2) & \cdot & \cdot & \cdots \\ \vdots & \vdots & \vdots & \vdots \end{bmatrix}$$

and ((A)) , ((B)) are coefficient tensors. For the two-dimensional second order case, ((A)) can be written in tensor product form [33] as:

$$((A)) = \underline{\bar{M}} \times \underline{\bar{N}} \ ,$$

where $\underline{\bar{M}}$ and $\underline{\bar{N}}$ are the component matrices of Tensor A. But

$$\underline{\bar{M}} \times \underline{\bar{N}} \equiv \begin{bmatrix} M_{11} \begin{pmatrix} N_{11} & N_{12} \\ N_{21} & N_{22} \end{pmatrix} & M_{12} \begin{pmatrix} N_{11} & N_{12} \\ N_{21} & N_{22} \end{pmatrix} \\ M_{21} \begin{pmatrix} N_{11} & N_{12} \\ N_{21} & N_{22} \end{pmatrix} & M_{22} \begin{pmatrix} N_{11} & N_{12} \\ N_{21} & N_{22} \end{pmatrix} \end{bmatrix}$$

Similarly, $((B)) = \underline{\bar{P}} \times \underline{\bar{Q}}$.

If the procedure of matrix elongation [68] is applied to the state variable and input matrices, eq (F.4) can be rewritten for the second order case in the following matrix form:

$$\begin{bmatrix} X_{11}(n_1,n_2) \\ X_{12}(n_1,n_2) \\ X_{21}(n_1,n_2) \\ X_{22}(n_1,n_2) \end{bmatrix} = \begin{bmatrix} M_{11}\begin{bmatrix} N_{11} & N_{12} \\ N_{21} & N_{22} \end{bmatrix} & M_{12}\begin{bmatrix} N_{11} & N_{12} \\ N_{21} & N_{22} \end{bmatrix} \\ M_{21}\begin{bmatrix} N_{11} & N_{12} \\ N_{21} & N_{22} \end{bmatrix} & M_{22}\begin{bmatrix} N_{11} & N_{12} \\ N_{21} & N_{22} \end{bmatrix} \end{bmatrix} \begin{bmatrix} X_{11}(n_1-1,n_2) \\ X_{12}(n_1-1,n_2) \\ X_{21}(n_1-1,n_2) \\ X_{22}(n_1-1,n_2) \end{bmatrix} +$$

$$+ \begin{bmatrix} P_{11}\begin{bmatrix} Q_{11} & Q_{12} \\ Q_{21} & Q_{22} \end{bmatrix} & P_{12}\begin{bmatrix} Q_{11} & Q_{12} \\ Q_{21} & Q_{22} \end{bmatrix} \\ P_{21}\begin{bmatrix} Q_{11} & Q_{12} \\ Q_{21} & Q_{22} \end{bmatrix} & P_{22}\begin{bmatrix} Q_{11} & Q_{12} \\ Q_{21} & Q_{22} \end{bmatrix} \end{bmatrix} \begin{bmatrix} X_{11}(n_1,n_2-1) \\ X_{12}(n_1,n_2-1) \\ X_{21}(n_1,n_2-1) \\ X_{22}(n_1,n_2-1) \end{bmatrix} \begin{bmatrix} U_{11}(n_1,n_2) \\ U_{12}(n_1,n_2) \\ U_{21}(n_1,n_2) \\ U_{22}(n_1,n_2) \end{bmatrix} \quad \text{(F.5)}$$

The output equation corresponding to (F.3) has, for the case of single output, the form

$$y(n_1,n_2) = \begin{bmatrix} R_1 & R_2 & R_3 & R_4 \end{bmatrix} \begin{bmatrix} X_{11}(n_1-1,n_2) \\ X_{12}(n_1-1,n_2) \\ X_{21}(n_1-1,n_2) \\ X_{22}(n_1-1,n_2) \end{bmatrix} + \begin{bmatrix} S_1 & S_2 & S_3 & S_4 \end{bmatrix} \begin{bmatrix} X_{11}(n_1,n_2-1) \\ X_{12}(n_1,n_2-1) \\ X_{21}(n_1,n_2-1) \\ X_{22}(n_1,n_2-1) \end{bmatrix}$$

$$+ \begin{bmatrix} U_{11}(n_1,n_2) \\ U_{12}(n_1,n_2) \\ U_{21}(n_1,n_2) \\ U_{22}(n_1,n_2) \end{bmatrix} \quad \text{(F.6)}$$

The Z-transform of eq (F.5) and eq (F.6) is solved for

$$H_g(z_1,z_2) = \frac{Y(z_1,z_2)}{U(z_1,z_2)}$$

A coefficient comparison of $H(z_1,z_2)$ as defined in eq (F.1) and $H_g(z_1,z_2)$ leads to a set of equations with many solutions. However, if the Parker-Hess rules [38] generalized to two-dimensions are applied, then the above equations can be solved for a unique set of coefficient tensors ((A)) and ((B)), which in turn can be used to construct a set of unique canonic sections.

APPENDIX G

LOW ORDER TWO-DIMENSIONAL STRUCTURES

Direct form and canonical structures of the third and fourth order uncoupled, as well as second and fourth order coupled, transfer functions are presented for the important two-dimensional case.

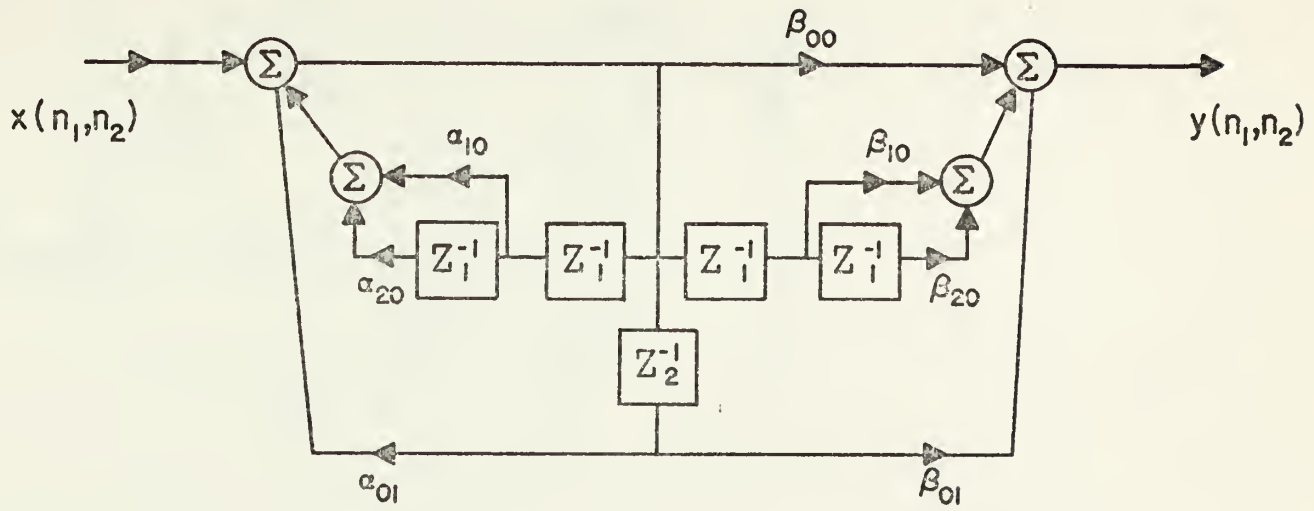

FIG.G.1: TWO-DIMENSIONAL THIRD ORDER UNCOUPLED FILTER IN DIRECT FORM 3 REALIZATION.

$$H(z_1,z_2) = \frac{\beta_{00} + \beta_{10}\, z_1^{-1} + \beta_{01}\, z_2^{-1} + \beta_{20}\, z_1^{-2}}{1 - \alpha_{10}\, z_1^{-1} - \alpha_{01}\, z_2^{-1} - \alpha_{20}\, z_1^{-2}}$$

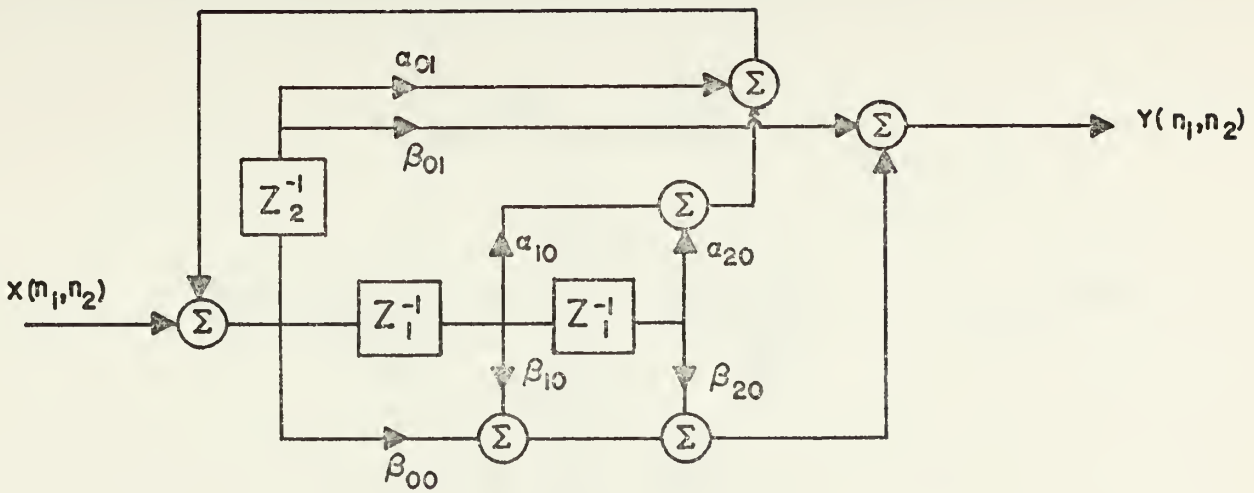

Fig. G. 2: TWO-DIMENSIONAL THIRD ORDER UNCOUPLED FILTER IN DIRECT FORM 3 (CANONIC) REALIZATION.

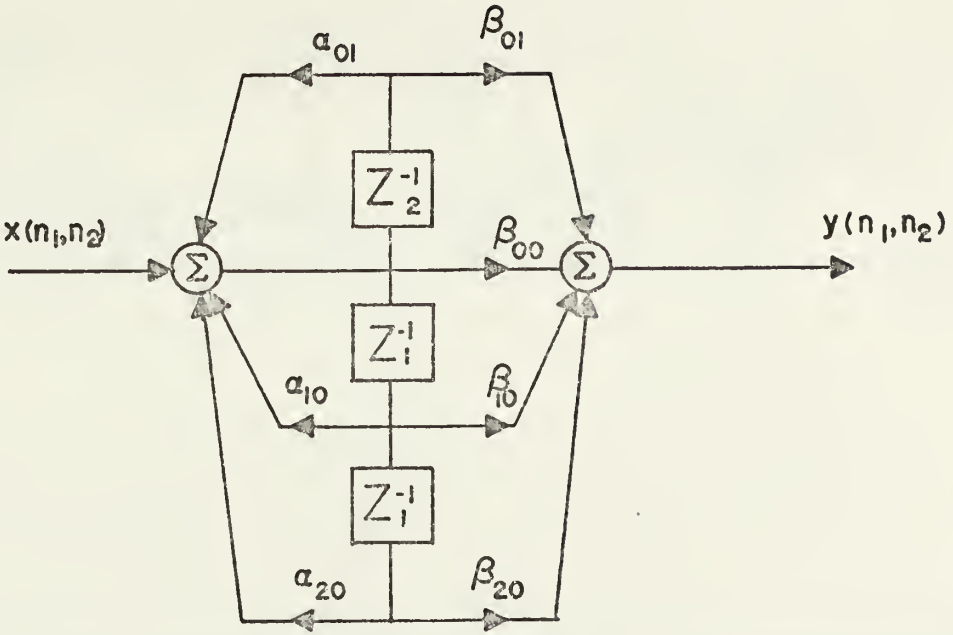

FIG. G. 3: TWO-DIMENSIONAL THIRD ORDER UNCOUPLED FILTER IN DIRECT FORM 3 (CANONIC) REALIZATION WITH COMBINED SUMMERS.

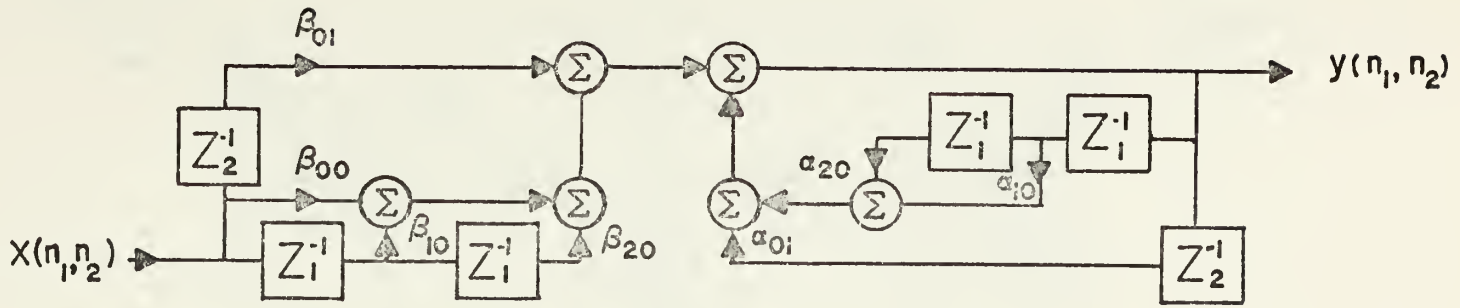

FIG. G 4: TWO-DIMENSIONAL THIRD ORDER UNCOUPLED FILTER IN DIRECT FORM 4 REALIZATION.

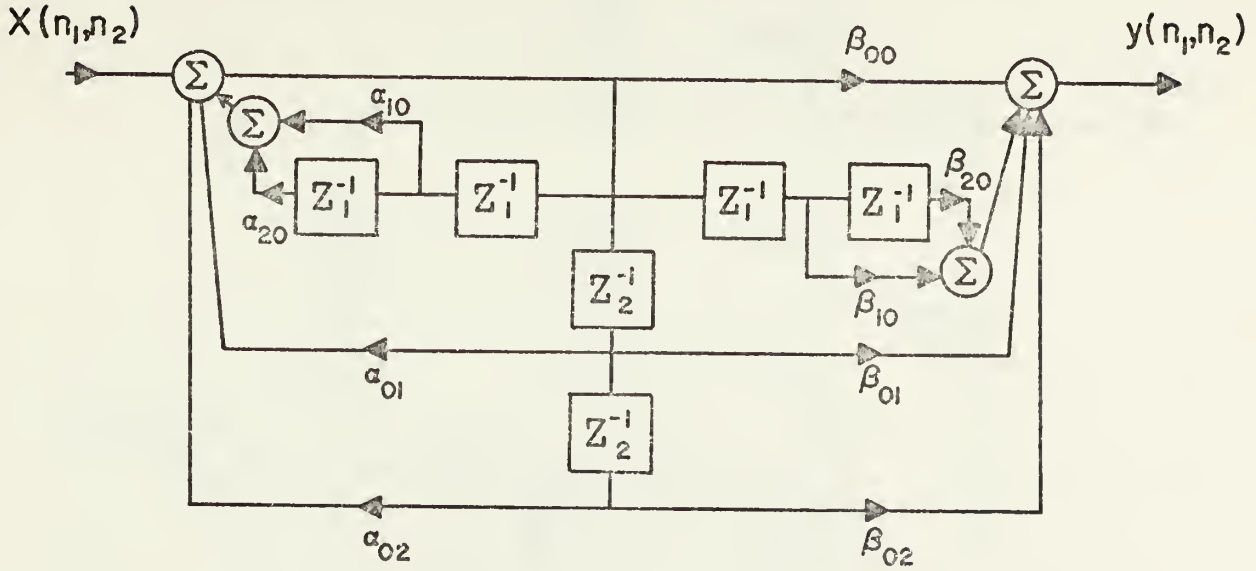

FIG.G.5: TWO-DIMENSIONAL FOURTH ORDER UNCOUPLED FILTER IN DIRECT FORM 3 REALIZATION.

$$H(z_1, z_2) = \frac{\beta_{00} + \beta_{10}\, z_1^{-1} + \beta_{01}\, z_2^{-1} + \beta_{20}\, z_1^{-2} + \beta_{02}\, z_2^{-2}}{1 - \alpha_{10}\, z_1^{-1} - \alpha_{01}\, z_2^{-1} - \alpha_{20}\, z_1^{-2} - \alpha_{02}\, z_2^{-2}}$$

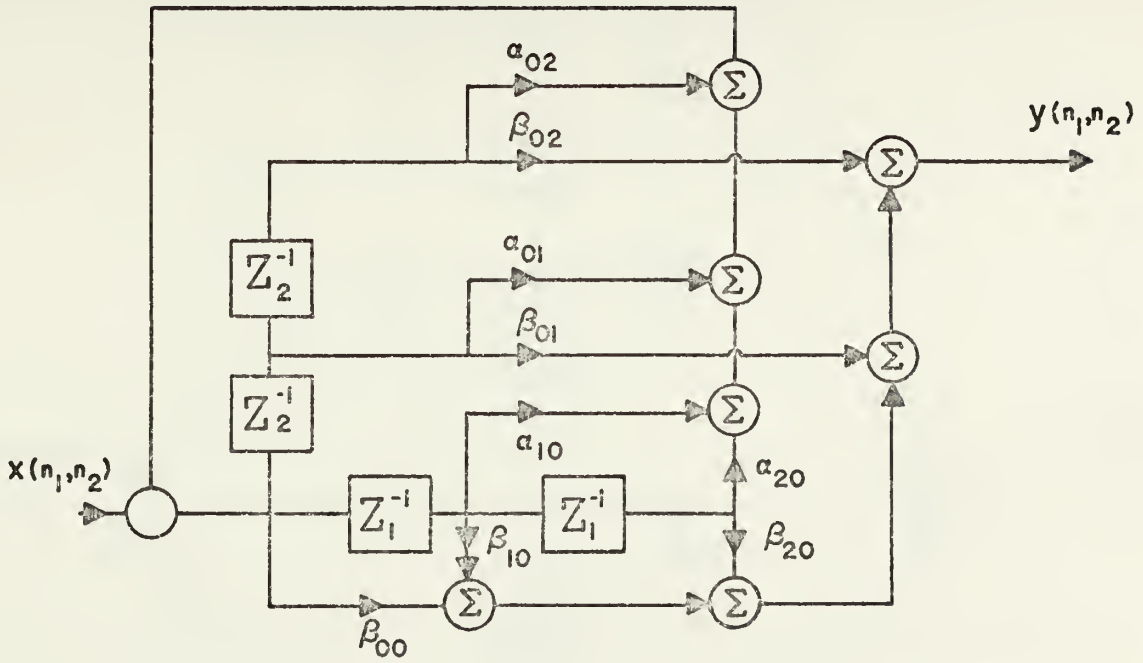

FIG.G.6: TWO-DIMENSIONAL FOURTH ORDER UNCOUPLED FILTER IN DIRECT FORM 3 (CANONIC) REALIZATIONS.

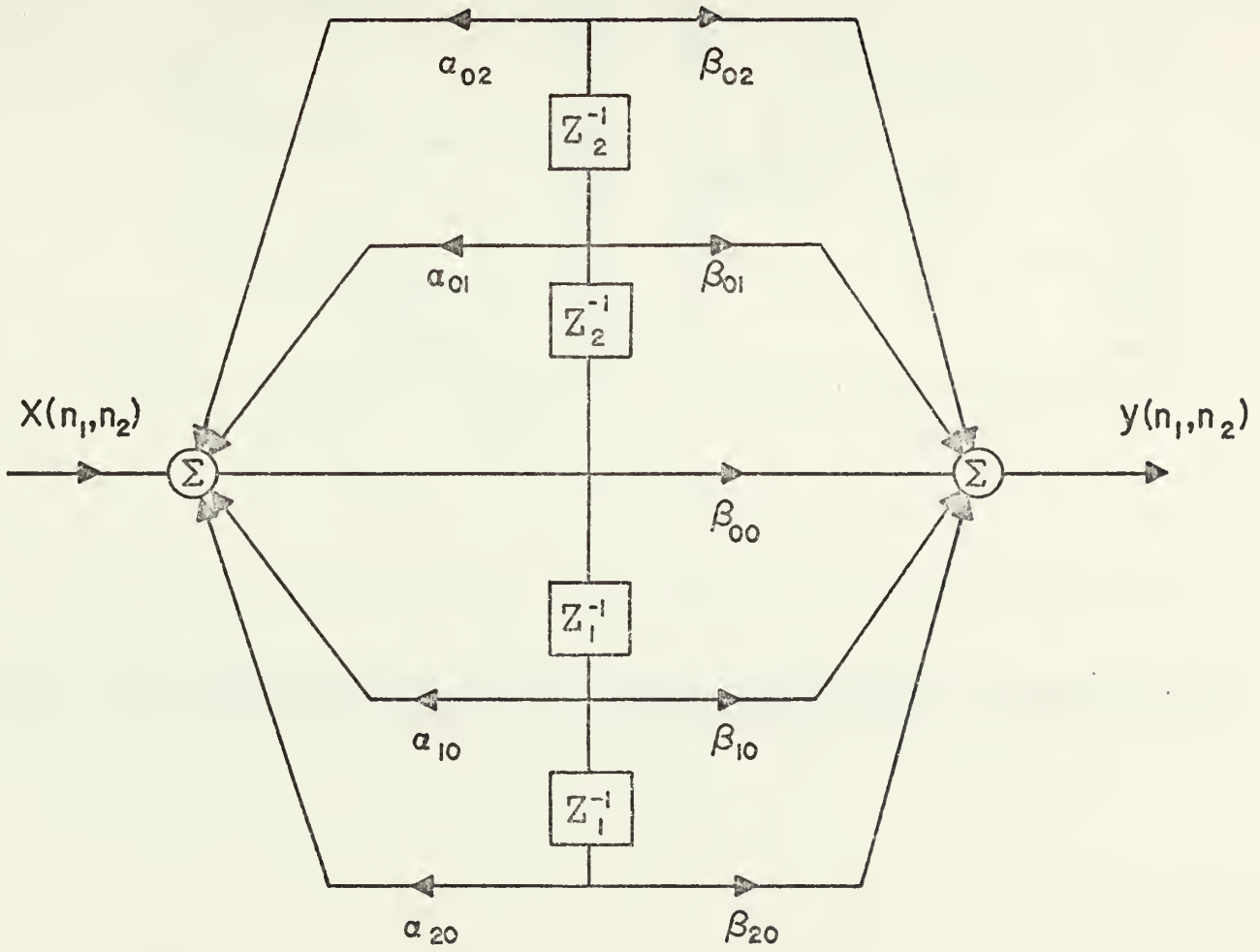

FIG. G.7: TWO-DIMENSIONAL FOURTH ORDER UNCOUPLED FILTER IN DIRECT FORM 3 WITH COMBINED SUMMERS (CANONIC)

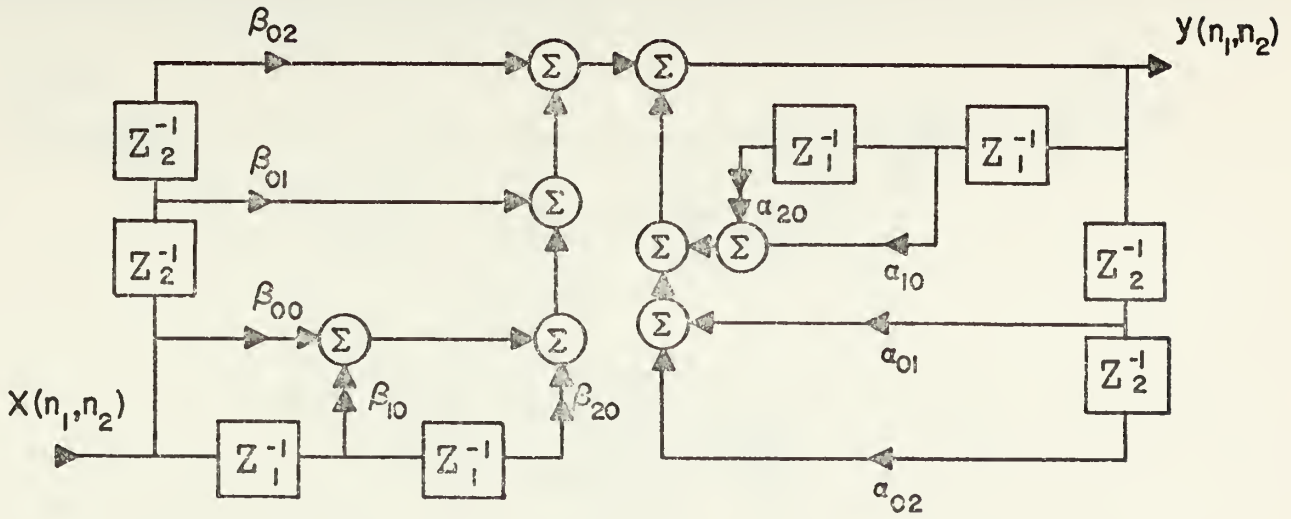

FIG.G.8: TWO-DIMENSIONAL FOURTH ORDER UNCOUPLED FILTER IN DIRECT FORM 4.

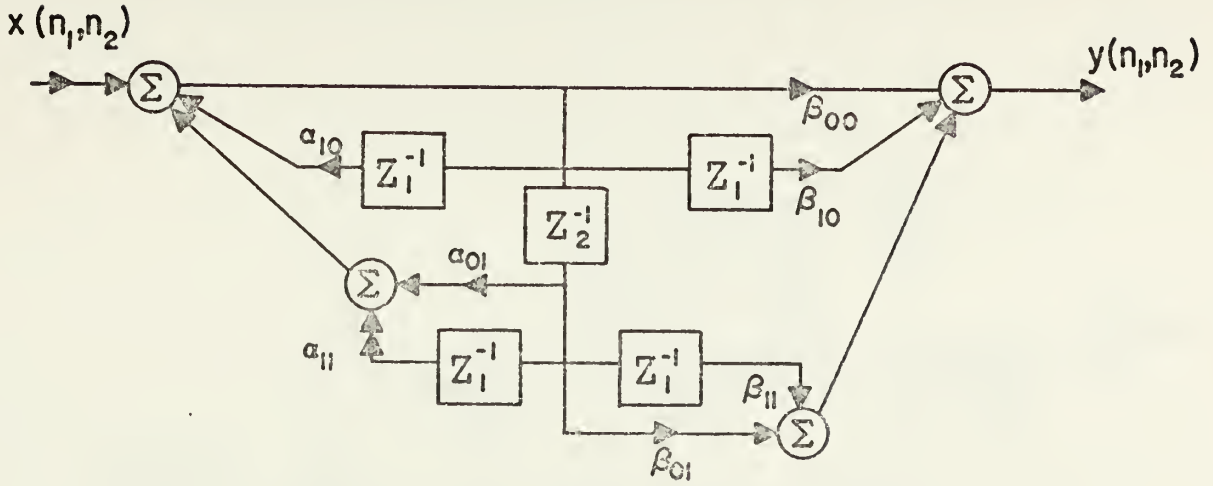

FIG.G.9: TWO-DIMENSIONAL SECOND ORDER COUPLED (BILINEAR) FILTER IN DIRECT FORM 3 REALIZATION.

$$H(z_1, z_2) = \frac{\beta_{00} + \beta_{10} z_1^{-1} + \beta_{01} z_2^{-1} + \beta_{11} z_1^{-1} z_2^{-1}}{1 - \alpha_{10} z_1^{-1} - \alpha_{01} z_2^{-1} - \alpha_{11} z_1^{-1} z_2^{-1}}$$

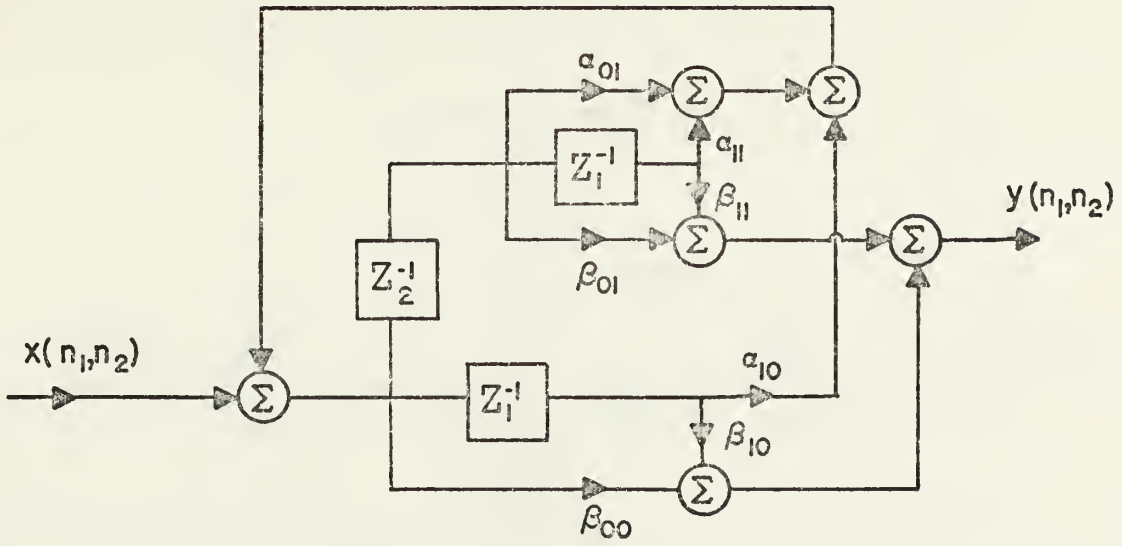

FIG.G.10: TWO-DIMENSIONAL SECOND ORDER COUPLED (BILINEAR) FILTER IN DIRECT FORM 3 (CANONIC) REALIZATION.

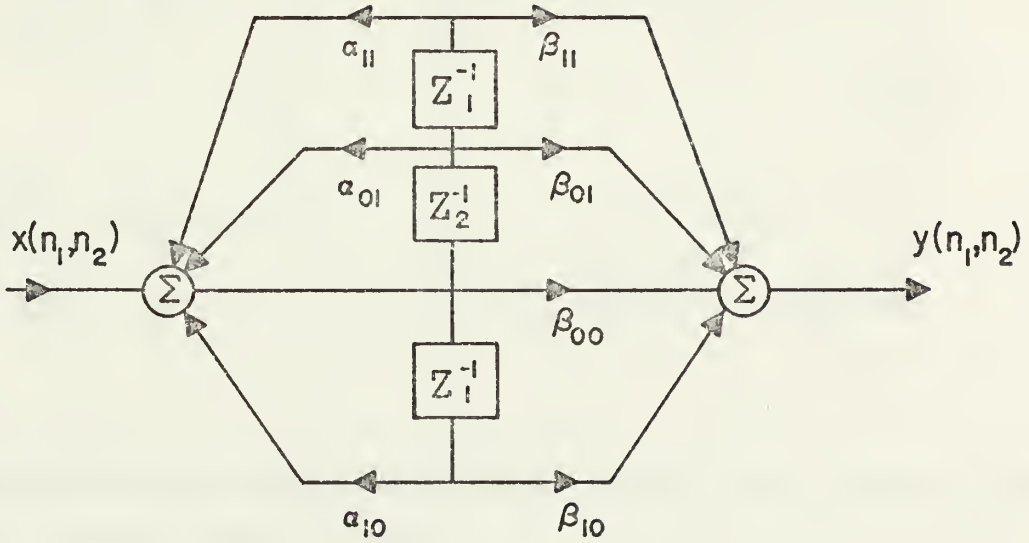

FIG. G.11: TWO-DIMENSIONAL SECOND ORDER COUPLED (BILINEAR) FILTER IN DIRECT FORM 3 REALIZATION (CANONIC), WITH COMBINED SUMMERS.

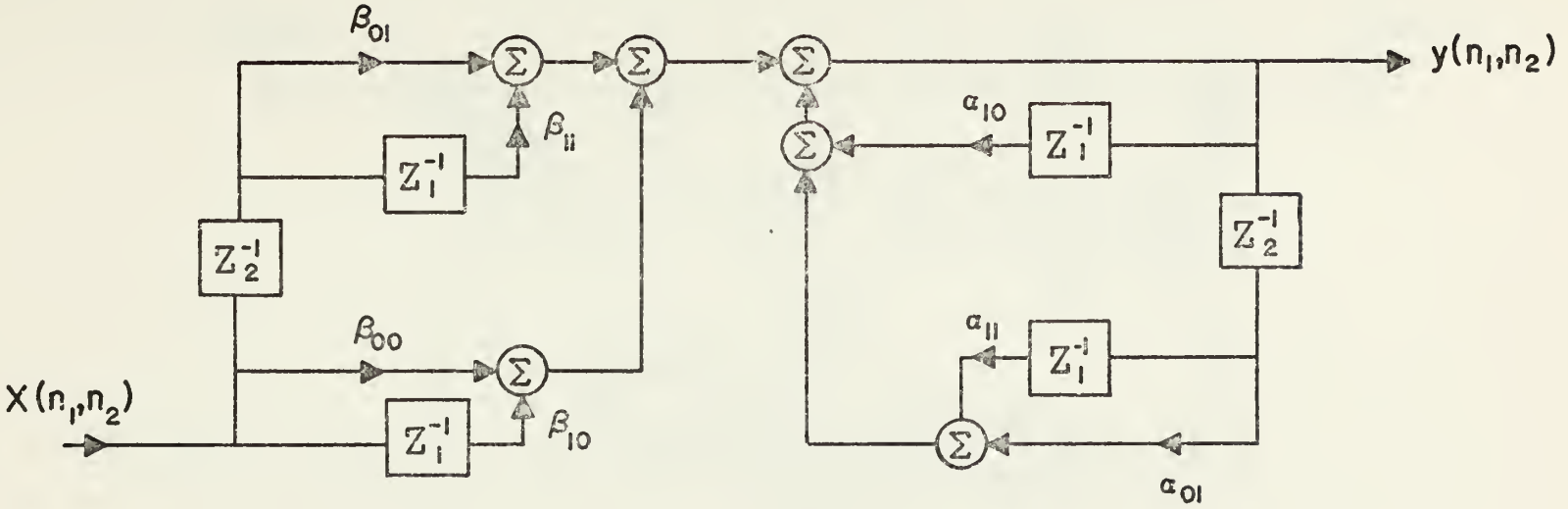

FIG. G. 12: TWO-DIMENSIONAL SECOND ORDER COUPLED (BILINEAR) FILTER IN DIRECT FORM 4 REALIZATION.

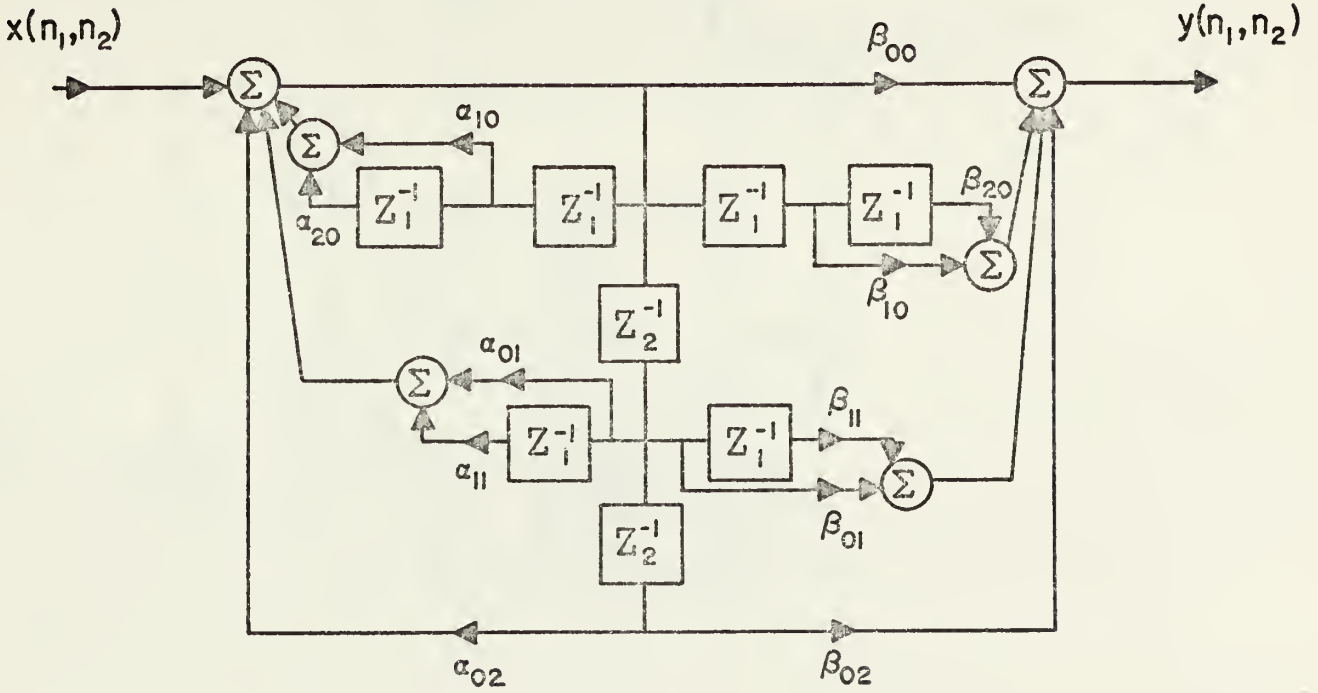

$$H(z_1,z_2) = \frac{\beta_{00} + \beta_{10}\, z_1^{-1} + \beta_{01}\, z_2^{-1} + \beta_{11}\, z_1^{-1} z_2^{-1} + \beta_{20}\, z_1^{-2} + \beta_{02}\, z_2^{-2}}{1 - \alpha_{10}\, z_1^{-1} - \alpha_{01}\, z_2^{-1} - \alpha_{11}\, z_1^{-1} z_2^{-1} - \alpha_{20}\, z_1^{-2} - \alpha_{02}\, z_2^{-2}}$$

FIG. G.13: TWO-DIMENSIONAL FOURTH ORDER COUPLED FILTER IN DIRECT FORM 3 REALIZATION.

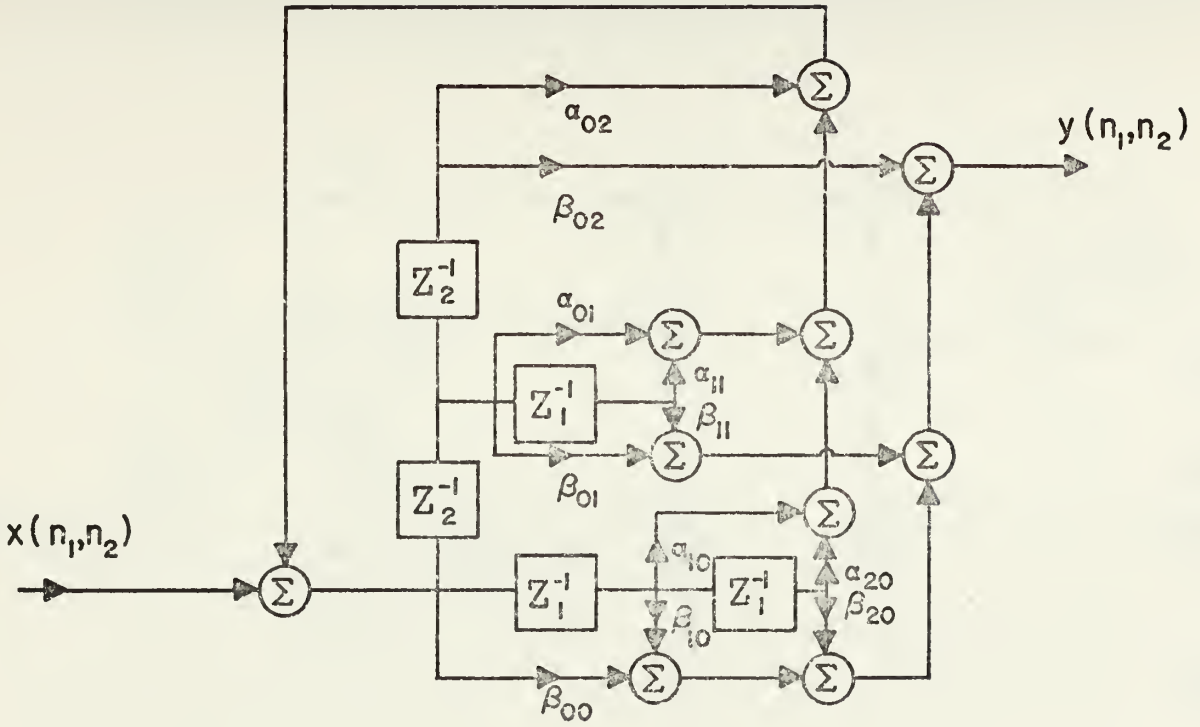

FIG. G. 14 : TWO-DIMENSIONAL FOURTH ORDER COUPLED FILTER IN DIRECT FORM 3 (CANONIC) REALIZATION.

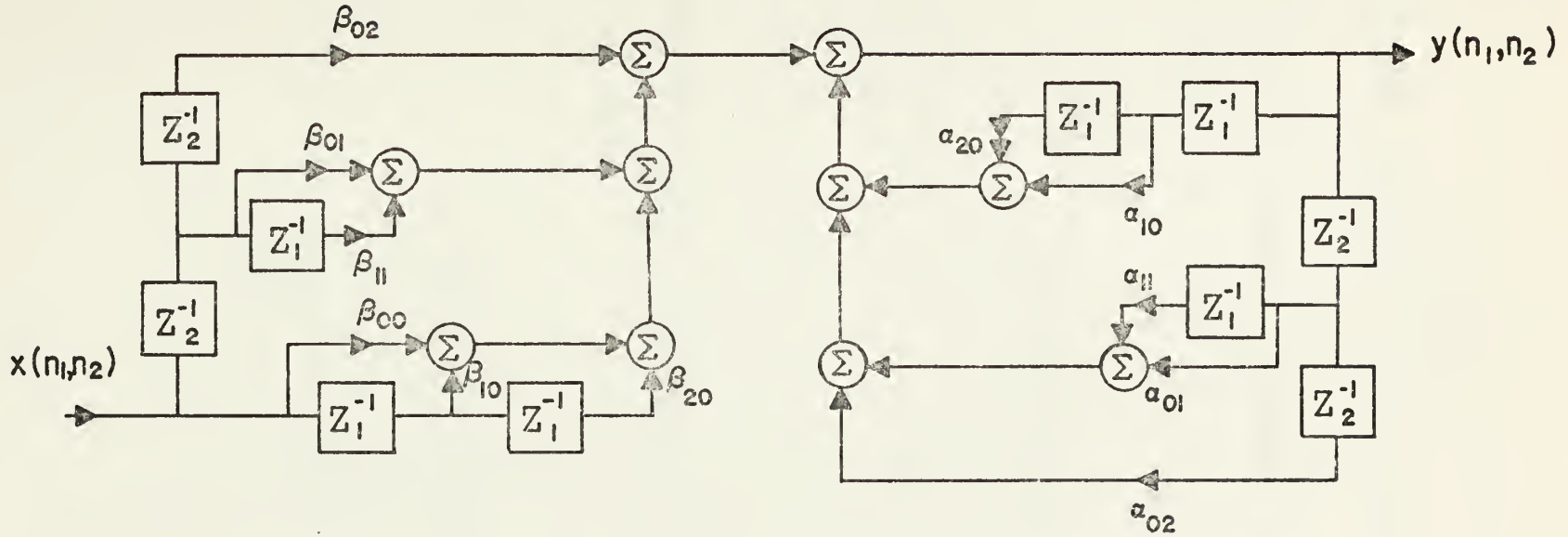

FIG.G.15: TWO-DIMENSIONAL FOURTH ORDER COUPLED FILTER IN DIRECT FORM 4 REALIZATION.

APPENDIX H

COORDINATE TRANSFORMATION IN TWO-DIMENSIONS

RECTANGULAR TO DIAGONAL COORDINATE SYSTEM

Given $\{h(n_1,n_2)\}$, which has the form

$$\{h(n_1,n_2)\} = \begin{vmatrix} h(0,0) & h(0,1) & h(0,2) & \cdots \\ h(1,0) & h(1,1) & h(1,2) & \cdots \\ h(2,0) & h(2,1) & h(2,2) & \cdots \\ \vdots & \vdots & \vdots & \end{vmatrix}$$

The transformation to the diagonal coordinate system $\{h_d(m_1,m_2)\}$, where

$$\{h_d\ m_1,m_2)\} = \begin{vmatrix} h_d(0,0) & h_d(1,1) & h_d(2,2) & \cdots \\ h_d(1,0) & h_d(2,1) & h_d(3,2) & \cdots \\ h_d(2,0) & h_d(3,1) & h_d(4,2) & \cdots \\ h_d(3,0) & \vdots & \vdots & \\ \vdots & & & \end{vmatrix}$$

is achieved by setting

$$m_1 = (n_1+n_2) \quad , \quad \text{and}$$

$$m_2 = n_2$$

Example: The bilinear transfer function is transformed from

$$H(z_1,z_2) = \frac{1}{1 - \alpha_{10}z_1^{-1} - \alpha_{01}z_2^{-1} - \alpha_{11}z_1^{-1}z_2^{-1}}$$

to

$$H_d(z_1,z_2) = \frac{1}{1 - \alpha_{10}\bar{z}_1^{-1} - \alpha_{01}z_1^{-1}\bar{z}_2^{-1} - \alpha_{11}\bar{z}_1^{-2}z_2^{-1}}$$

where $\bar{z}_1^{-1}$ delays exactly as z_1^{-1} does,

and $\bar{z}_2^{-1}$ delays along the diagonal entries.

APPENDIX I

APPLICATION OF SERIES METHOD FOR THE DERIVATION OF STABILITY CONDITIONS IN TWO-DIMENSIONS

A. THIRD ORDER (UNCOUPLED) FILTER

1. Unit Sample Response

The planar unit sample response $\underline{A}$ will be computed columnwise using eq (4.21).

For $n_2 = 0$ (Column 0)

$$h(0,0) = 1$$

$$h(1,0) = \alpha_{10}$$

$$h(2,0) = \alpha_{10}^2 + \alpha_{20}$$

$$h(3,0) = \alpha_{10}^3 + 2\alpha_{10}\alpha_{20}$$

$$\vdots$$

$$h(k,0) = \alpha_{10}^k + (k-1)\,\alpha_{10}^{k-2}\alpha_{20} + \frac{(k-2)(k-3)}{2!}\,\alpha_{10}^{k-4}\alpha_{20}^2 + \frac{(k-3)(k-4)(k-5)}{3!}\,\alpha_{10}^{k-6}\alpha_{20}^3 + \cdots + E_{k0}(\alpha_{10},\alpha_{20})$$

$$\vdots$$

where $$E_{k0}(\alpha_{10},\alpha_{20}) = \begin{cases} \alpha_{20}^{k/2}, & k \text{ even} \\ \dfrac{(\frac{k}{2}+\frac{1}{2})!}{(\frac{k}{2}-\frac{1}{2})!}\,\alpha_{10}\alpha_{20}^{(k-1)/2}, & k \text{ odd} \end{cases}$$

The k^{th} term $h(k,0)$ can be shown to be equal to

$$h(k,0) = \sum_{m=0}^{[k/2]} \frac{(k-m)(k-m-1)\cdots(k-2m+2)}{m!} \alpha_{10}^{k-2m} \alpha_{20}^{m} \qquad (I.1)$$

which is equal to

$$h(k,0) = \sum_{m=0}^{[k/2]} \frac{(k-m)!}{m!\,(k-2m)!} \alpha_{10}^{k-2m} \alpha_{20}^{m} \qquad (I.2)$$

For $n_2 = 1$ (Column 2)

$$h(0,1) = \alpha_{01}$$

$$h(1,1) = 2\alpha_{01}\alpha_{10}$$

$$h(2,1) = 3\alpha_{01}\alpha_{10}^{2} + 2\alpha_{01}\alpha_{20}$$

$$h(3,1) = 4\alpha_{01}\alpha_{10}^{3} + 6\alpha_{01}\alpha_{10}\alpha_{20}$$

$$h(4,1) = 5\alpha_{01}\alpha_{10}^{4} + 12\alpha_{01}\alpha_{10}^{2}\alpha_{20} + 3\alpha_{01}\alpha_{20}^{2}$$

$$h(5,1) = 6\alpha_{01}\alpha_{10}^{5} + 20\alpha_{01}\alpha_{10}^{2}\alpha_{20} + 12\alpha_{01}\alpha_{10}\alpha_{20}^{2}$$

$$\vdots$$

$$h(k,1) = (k+1)\alpha_{10}^{k}\alpha_{01} + \frac{k(k-1)}{1!}\alpha_{10}^{k-2}\alpha_{01}\alpha_{20} + \frac{(k-1)(k-2)(k-3)}{2!}\alpha_{10}^{k-4}\alpha_{01}\alpha_{20}^{2}$$

$$+ \cdots + E_{k_1}(\alpha_{10},\alpha_{20},\alpha_{01})$$

where

$$E_{k_1}(\alpha_{10},\alpha_{01},\alpha_{20}) = \begin{cases} \dfrac{(\frac{k}{2}+1)!}{\frac{k}{2}!}\,\alpha_{01}\,\alpha_{20}^{k/2} & , \quad k \text{ even} \\ \dfrac{(\frac{k}{2}+\frac{3}{2})!}{(\frac{k}{2}-\frac{1}{2})!}\,\alpha_{10}\alpha_{01}\alpha_{20}^{(k-1)/2} & , \quad k \text{ odd} \end{cases}$$

It can be shown similarly, as for the first column, that

$$h(k,1) = \sum_{m=0}^{[k/2]} \frac{(k-m+1)!\ \alpha_{10}^{k-2m}\ \alpha_{01}\ \alpha_{20}^{m}}{m!\ (k-2m)!}$$

<u>For $n_2 = j$</u> (Column j)

$$h(0,j) = \alpha_{01}^{j}$$

$$h(1,j) = (j+1)\ \alpha_{10}\alpha_{01}^{j}$$

$$h(2,j) = \frac{(j+1)(j+2)}{2!}\ \alpha_{10}^{2}\alpha_{01}^{j} + (j+1)\ \alpha_{01}^{j}\alpha_{20}$$

$$h(3,j) = \frac{(j+1)(j+2)(j+3)}{3!}\ \alpha_{10}^{3}\alpha_{01}^{j} + \frac{(j+1)(j+2)}{1!}\ \alpha_{10}\alpha_{01}^{j}\alpha_{20}$$

$$h(4,j) = \frac{(j+1)\cdots(j+4)}{4!}\ \alpha_{10}^{4}\alpha_{01}^{j} + \frac{(j+1)\cdots(j+3)}{2!}\ \alpha_{10}^{2}\alpha_{01}^{j}\alpha_{20}$$

$$+ \frac{(j+1)(j+2)}{1!}\ \alpha_{01}^{j}\alpha_{20}^{2}$$

$$\vdots$$

$$\vdots$$

$$h(k,j) = \sum_{m=0}^{[k/2]} \frac{(k-m+j)!\ \alpha_{10}^{k-2m}\ \alpha_{01}^{j}\ \alpha_{20}^{m}}{j!\ m!\ (k-2m)!}$$

$$\vdots$$

The unit pulse response $\underline{\underline{A}}$ is summarized for easy reference in Table 5.2.

2. Sum of All Absolute Entries of the Unit Pulse Response

The summation of all entries of $\langle\underline{\underline{A}}\rangle$ is performed following Cauchy's third method, which is outlined in Appendix K.

The sum of all entries along the i^{th} diagonal, where $i = 0,1,\ldots,I,\ldots$, using the notation of Appendix K and after applying the binomial theorem, becomes:

$$D_0 = 1 \tag{I.3a}$$

$$D_1 = (|\alpha_{10}| + |\alpha_{01}|) \tag{I.3b}$$

$$D_2 = (|\alpha_{10}| + |\alpha_{01}|)^2 + \alpha_{20} \tag{I.3c}$$

$$D_3 = (|\alpha_{10}| + |\alpha_{01}|)^3 + 2\alpha_{20}(|\alpha_{10}| + |\alpha_{01}|) \tag{I.3d}$$

$$D^4 = (|\alpha_{10}| + |\alpha_{01}|)^4 + 3\alpha_{20}(|\alpha_{10}| + |\alpha_{01}|)^2 + \alpha_{20}^2 \tag{I.3e}$$

$$\vdots$$

$$D_I = (|\alpha_{10}| + |\alpha_{01}|)^I + (I-1)\alpha_{20}(|\alpha_{10}| + |\alpha_{01}|)^{I-2} + \frac{(I-1)(I-2)}{2}(|\alpha_{10}| + |\alpha_{01}|)^{I-4}\alpha_{20}^2 + \cdots \tag{I.3f}$$

$$\vdots$$

It is proven in Appendix K that

$$S = \sum_{i=0}^{\infty} D_i$$

which can be written using eq (I.3) as

$$S = \sum_{n=0}^{\infty} (\alpha_{20})^n$$

$$+ (|\alpha_{10}| + |\alpha_{01}|) \sum_{n=0}^{\infty} n(\alpha_{20})^{n-1}$$

$$+ (|\alpha_{10}| + |\alpha_{01}|)^2 \sum_{n=0}^{\infty} \frac{n(n-1)}{2!} (\alpha_{20})^{n-2}$$

$$+ (|\alpha_{10}| + |\alpha_{01}|)^3 \sum_{n=0}^{\infty} \frac{n(n-1)(n-2)}{3!} (\alpha_{20})^{n-3}$$

$$+ \cdots$$

$$\vdots$$

But this is equal to

$$S = \left[1 + (|\alpha_{10}| + |\alpha_{01}|)\frac{d}{d\alpha_{20}} + (|\alpha_{10}| + |\alpha_{01}|)^2 \frac{d^2}{d\alpha_{20}^2} + (|\alpha_{10}| + |\alpha_{01}|)^3 \frac{d^3}{d\alpha_{20}^3} + \cdots \right] \cdot \left\{ \sum_{n=0}^{\infty} (\alpha_{20})^n \right\} \qquad (I.4)$$

where the $[\,]$ designate a weighted infinite derivative operator.

It is known from infinite series theory that the geometric series

$$\sum_{n=0}^{\infty} (\alpha_{20})^n$$

converges to $\frac{1}{1 - \alpha_{20}}$ if and only if $|\alpha_{20}| < 1$. Thus eq (I.4) can be rewritten, after applying the derivative operator, as

$$S = \frac{1}{(1 - \alpha_{20})} \sum_{n=0}^{\infty} \left\{ \frac{|\alpha_{10}| + |\alpha_{01}|}{1 - \alpha_{20}} \right\}^n$$

which converges to

$$S = \frac{1}{(1 - \alpha_{20})} \cdot \frac{1}{1 - \left(\frac{|\alpha_{10}| + |\alpha_{01}|}{(1 - \alpha_{20})} \right)}$$

if and only if

$$|\alpha_{10}| + |\alpha_{01}| < |1 - \alpha_{20}| \qquad \text{(I.5)}$$

or equivalently, since $|\alpha_{20}| < 1$,

$$\alpha_{20} < 1 - (|\alpha_{10}| + |\alpha_{01}|)$$

q.e.d.

3. Improved Stability Conditions for Third-Order Uncoupled Filter in Two-Dimensions Where $\alpha_{20} < -\frac{\alpha_{10}^2}{4}$

It has been shown in eq (5.21) that the sum of all absolute terms in the first column of Table 5.2 is:

$$\sum_{n_1=0}^{\infty} |h(n,0)| = \sum_{n_1=0}^{\infty} \left| (\sqrt{-\alpha_{20}})^{n_1} C_{n_1}^{(1)} \left(\frac{\alpha_{10}}{2\sqrt{-\alpha_{20}}} \right) \right| \qquad \text{(I.6)}$$

For

$$\alpha_{20} < -\frac{\alpha_{10}^2}{4} \quad ,$$

there exists an angle

$$\theta = \arccos\left(\frac{\alpha_{10}}{2\sqrt{-\alpha_{20}}}\right)$$

for which

$$C_{n_1}^{(1)}\left(\frac{\alpha_{10}}{2\sqrt{-\alpha_{20}}}\right) = C_{n_1}^{(1)}(\cos\theta)$$

But since it can be shown [56] that:

$$C_{n_1}^{(1)}(\cos\theta) = \frac{\sin[(n_1+1)\,\theta]}{\sin\theta} \quad ,$$

it is possible to rewrite eq (I.6) in the following form

$$\sum_{n_1=0}^{\infty} |h(n_1,0)| = \sum_{n_1=0}^{\infty} \left| (\sqrt{-\alpha_{20}})^{n_1} \frac{\sin[(n_1+1)\,\theta]}{\sin\theta} \right| \quad (I.7)$$

For this sum there exists no closed form solution. Following a method by U. Apple [56], eq (I.7) can be viewed as the samples of a damped sine wave with continuous argument $(\varepsilon+1)\theta$, starting at $\varepsilon = -1$ for which the

first sample, $n_1 = \varepsilon = -1$ is, in this case, zero. This fact allows the determination of an upper bound by the equivalent integral, multiplied by a correction factor C as proven in [56].

$$\sum_{n_1=0}^{\infty} |h(n_1,0)| \leq C \cdot \frac{1}{\sin\theta} \int_{-1}^{\infty} \left(\sqrt{-\alpha_{20}} \right)^{\varepsilon} \cdot$$

$$\cdot \left|\sin[(\varepsilon+1)\theta]\right| d\varepsilon \qquad \text{(I.8)}$$

The argument of the integral has zero-crossings equally spaced, e.g.,

$$i\,\frac{\pi}{\theta} - 1 \leq \varepsilon < (i+1)\cdot\frac{\pi}{\theta} - 1 \qquad \text{for } i=0,1,2,\ldots$$

The integral can thus be written as the integral over one segment (e.g., the first one) multiplied by the amplitude factor $\left(\sqrt{-\alpha_{20}}\right)^{i\,\frac{\pi}{\theta}}$ and by summing over all i in the following manner:

$$\int_{-1}^{\infty} \left(\sqrt{-\alpha_{20}}\right)^{\varepsilon} \left|\sin(\varepsilon+1)\theta\right| \, d\varepsilon$$

$$\leq \left\{ \int_{-1}^{\frac{\pi}{\theta}-1} \left(\sqrt{-\alpha_{20}}\right)^{\varepsilon} \sin(\varepsilon+1)\theta \, d\varepsilon \right\} \sum_{i=0}^{\infty} \left(\sqrt{-\alpha_{20}}\right)^{i \frac{\pi}{\theta}}$$

$$= \frac{1}{\sqrt{-\alpha_{20}}} \frac{\theta \cdot \left(1 + \sqrt{-\alpha_{20}}^{\frac{\pi}{\theta}}\right)}{\left(\theta^2 + \left[\ln\left(\sqrt{-\alpha_{20}}\right)\right]^2\right)} \sum_{i=0}^{\infty} \left(\sqrt{-\alpha_{20}}\right)^{i \frac{\pi}{\theta}}$$

$$= \frac{\theta \cdot \left(1 + \sqrt{-\alpha_{20}}^{\frac{\pi}{\theta}}\right)}{\sqrt{-\alpha_{20}} \left(\theta^2 + \left[\ln\left(\sqrt{-\alpha_{20}}\right)\right]^2\right) \left(1 - \sqrt{-\alpha_{20}}^{\frac{\pi}{\theta}}\right)}$$

if and only if $|\alpha_{20}| < 1$.

Thus an upper bound for $\sum_{n_1=0}^{\infty} |h(n_1,0)|$ is

$$\sum_{n_1=0}^{\infty} |h(n_1,0)| \leq C \frac{1}{\sin\theta} \frac{\theta \cdot \left(1 + \sqrt{-\alpha_{20}}^{\frac{\pi}{\theta}}\right)}{\sqrt{-\alpha_{20}} \left[\theta^2 + \left(\ln\sqrt{-\alpha_{20}}\right)^2\right] \left[1 - \sqrt{-\alpha_{20}}^{\frac{\pi}{\theta}}\right]} \tag{I.9}$$

where C is computed in Ref [56] to be $C = 1.11$.

Theorem I:

$$|\alpha_{01}|^{j} \left\{ \sum_{n_1=0}^{\infty} |h(n_1,0)| \right\}^{j+1} \geq \sum_{n_1=0}^{\infty} |h(n_1,j)|$$

for each and every j.

Proof: See Appendix L.

The sum of all absolute entries in the unit sample response:

$$S = \sum_{n_2=0}^{\infty} \sum_{n_1=0}^{\infty} |h(n_1,n_2)|$$

is bounded by

$$\leq \sum_{n_2=0}^{\infty} |\alpha_{01}|^{n_2} \left\{ \sum_{n_1=0}^{\infty} |h(n_1,0)| \right\}^{n_2+1}$$

which by eq (I. 9) is bounded by

$$S \leq \sum_{n_2=0}^{\infty} |\alpha_{01}|^{n_2} \left\{ C \cdot \frac{1}{\sin\theta} \frac{\theta \left(1+\sqrt{-\alpha_{20}}\ \frac{\pi}{\theta}\right)}{\sqrt{-\alpha_{20}}\ [\theta^2 + (\ln \sqrt{-\alpha_{20}}\ )^2]\ (1 - \sqrt{-\alpha_{20}}\ \frac{\pi}{\theta})} \right\}^{(n_2+1)}$$

which converges if

$$|\alpha_{01}| \leq \frac{\sin\theta \cdot \sqrt{-\alpha_{20}}\ [\theta^2 + \ln^2 \sqrt{-\alpha_{20}}\ ][1 - \sqrt{-\alpha_{20}}^{\ \frac{\pi}{\theta}}]}{C \cdot \theta \left(1 + \sqrt{\alpha_{20}}^{\ \frac{\pi}{\theta}}\right)} \qquad \text{(I.9)}$$

where $\theta = \arccos\left(\frac{\alpha_{10}}{2\sqrt{-\alpha_{20}}}\right)$

B. SUM OF THE ABSOLUTE ENTRIES OF THE UNIT SAMPLE RESPONSE OF A FOURTH ORDER (UNCOUPLED) FILTER

The summation of the absolute entries of the unit sample response corresponding to the fourth order uncoupled transfer function follows Cauchy's third method, as outlined in Appendix K, and is similar to the one performed in Section A of this appendix.

It was shown in Section B.2.b of Chapter V, that

$$S^c = \sum_{n_1=0}^{\infty} \sum_{n_2=0}^{\infty} \left| \sum_{i=0}^{[n_1/2]} \left\{ \frac{\alpha_{10}^{n_1-2i}\ \alpha_{20}^{i}}{i!(n_1-2i)!} \sum_{m=0}^{[n_2/2]} \frac{(n_1+n_2-m-i)!\,\alpha_{01}^{n_2-2m}\ \alpha_{02}^{m}}{m!\,(n_2-2m)!} \right\} \right| \qquad \text{(I.10)}$$

is equal to

$$S^c = \sum_{n_1=0}^{} \sum_{n_2=0}^{} |\alpha_{01}|^{n_2} |\alpha_{10}|^{n_1} \sum_{i=0}^{[n_1/2]} \left\{ \frac{\left[\frac{\alpha_{20}}{\alpha_{10}^2}\right]^i}{i!(n_1-2i)!} \sum_{m=0}^{[n_2/2]} \frac{(n_1+n_2-m-i)}{m!\,(n_2-2m)!} \left[\frac{\alpha_{02}}{\alpha_{01}^2}\right]^m \right\} \qquad \text{(I.11)}$$

for conditions stated in eqs (5.54) and (5.55). For convenience, the unit sample response $\langle \underline{\bar{A}} \rangle$ is listed in Tables I.1 and I.2, in which the absolute signs around each unit sample response entry, i.e., $|h(\bar{n})|$ are replaced by absolute signs around α_{10} and around α_{01} in accordance with eq (I.11).

The sum of all entries along the i^{th} diagonal, i.e., D_i, after applying the binomial theorem becomes:

$$D_0 = 1$$

$$D_1 = (|\alpha_{10}| + |\alpha_{01}|)$$

$$D_2 = (|\alpha_{10}| + |\alpha_{01}|)^2 + \alpha_{20} + \alpha_{02}$$

$$D_3 = (|\alpha_{10}| + |\alpha_{01}|)^3 + 2(\alpha_{20} + \alpha_{02})(|\alpha_{10}| + |\alpha_{01}|)$$

$$D_4 = (|\alpha_{10}| + |\alpha_{01}|)^4 + 3(\alpha_{20} + \alpha_{02})(|\alpha_{10}| + |\alpha_{01}|)^2 + (\alpha_{20} + \alpha_{02})^2$$

$$D_5 = (|\alpha_{10}| + |\alpha_{01}|)^5 + 4(\alpha_{20} + \alpha_{02})(|\alpha_{10}| + |\alpha_{01}|)^3 + 3(\alpha_{20} + \alpha_{02})^2(|\alpha_{10}| + |\alpha_{01}|)$$

$$D_6 = (|\alpha_{10}| + |\alpha_{01}|)^6 + 5(\alpha_{20} + \alpha_{02})(|\alpha_{10}| + |\alpha_{01}|)^4 + 6(\alpha_{20} + \alpha_{02})^2(|\alpha_{10}| + |\alpha_{01}|)^2 + (\alpha_{20} + \alpha_{02})^3$$

$$\vdots$$

$n_1 = 0$	$n_2 = 0$	1	2
0	1	$\lvert d_{01}\rvert$	$d_{01}^2 + d_{02}$
1	$\lvert d_{10}\rvert$	$2\lvert d_{10}\rvert\lvert d_{01}\rvert$	$3\lvert d_{10}\rvert d_{01}^2 + 2\lvert d_{10}\rvert d_{02}$
2	$d_{10}^2 + d_{20}$	$3d_{10}^2\lvert d_{01}\rvert + 2\lvert d_{01}\rvert d_{20}$	$\{6 d_{10}^2 d_{01}^2 + 3 d_{10}^2 d_{02} +$ $+ 2 d_{02} d_{20} + 3 d_{01}^2 d_{20}\}$
3	$\lvert d_{10}\rvert^3 + 2\lvert d_{10}\rvert d_{20}$	$4\lvert d_{10}^3\rvert\lvert d_{01}\rvert + 6\lvert d_{10}\rvert\lvert d_{01}\rvert d_{20}$	$\{10\lvert d_{10}^3\rvert d_{01}^2 + 4\lvert d_{10}^3\rvert d_{02} +$ $+ 6\lvert d_{10}\rvert d_{02} d_{20} + 12\lvert d_{10}\rvert d_{01}^2 d_{20}\}$
4	$\{d_{10}^4 + 3 d_{10}^2 d_{20} +$ $+ d_{20}^2\}$	$\{5 d_{10}^4\lvert d_{01}\rvert + 12 d_{10}^2\lvert d_{01}\rvert d_{20} +$ $+ 3\lvert d_{01}\rvert d_{20}^2\}$	$\{15 d_{10}^4 d_{01}^2 + 5 d_{10}^4 d_{02} + 12 d_{10}^2 d_{02} d_{20} +$ $+ 30 d_{10}^2 d_{01}^2 d_{20} + 3 d_{20}^2 d_{02} + 6 d_{01}^2 d_{20}^2\}$
5	$\{\lvert d_{10}\rvert^5 + 4\lvert d_{10}\rvert^3 d_{20} +$ $+ 3\lvert d_{10}\rvert d_{20}\}$	$\{6\lvert d_{10}^5\rvert\lvert d_{01}\rvert + 20\lvert d_{10}^3\rvert\lvert d_{01}\rvert d_{20} +$ $+ 12\lvert d_{10}\rvert\lvert d_{01}\rvert d_{20}^2\}$	$\{21\lvert d_{10}\rvert^5 d_{01}^2 + 6\lvert d_{10}^5\rvert d_{02} + 20\lvert d_{10}\rvert^3 d_{20} d_{02} +$ $+ 60\lvert d_{10}\rvert^3 d_{01}^2 d_{20} + 12\lvert d_{10}\rvert d_{20}^2 d_{02} + 30\lvert d_{10}\rvert d_{01}^2 d_{20}^2\}$
6	$\{d_{10}^6 + 5 d_{10}^4 d_{20} +$ $+ 6 d_{10}^2 d_{20}^2 + d_{20}^3\}$	$\{7 d_{10}^6\lvert d_{01}\rvert + 30 d_{10}^4\lvert d_{01}\rvert d_{20} +$ $+ 30 d_{10}^2\lvert d_{01}\rvert d_{20}^2 + 4\lvert d_{01}\rvert d_{20}^3\}$	.
7	$\{\lvert d_{10}\rvert^7 + 6\lvert d_{10}\rvert^5 d_{20} +$ $+ 10\lvert d_{10}\rvert^3 d_{20}^2 + 4\lvert d_{10}\rvert d_{20}^3\}$	.	.

TABLE I.1 UNIT SAMPLE RESPONSE $\langle \overline{A} \rangle$ CORRESPONDING TO THE FOURTH ORDER UNCOUPLED TRANSFER FUNCTION FOR $n_2 = 0,1,2$

TABLE I.2 UNIT SAMPLE RESPONSE $\bar{A}$ CORRESPONDING TO THE FOURTH ORDER UNCOUPLED TRANSFER FUNCTION FOR $n_2 = 3$ to $n_2 = 7$

	$n_2 = 3$	$n_2 = 4$	$n_2 = 5$
$n_1 = 0$	$\lvert\alpha_{01}\rvert^3 + 2\lvert\alpha_{01}\rvert\alpha_{02}$	$\alpha_{01}^4 + 3\alpha_{01}^2\alpha_{02} + \alpha_{02}^2$	$\lvert\alpha_{01}\rvert^5 + 4\lvert\alpha_{01}\rvert^3\alpha_{02} + 3\lvert\alpha_{01}\rvert\alpha_{02}^2$
$n_1 = 1$	$4\lvert\alpha_{10}\rvert\lvert\alpha_{01}\rvert^3 + 6\lvert\alpha_{10}\rvert\lvert\alpha_{01}\rvert\alpha_{02}$	$5\lvert\alpha_{10}\rvert\alpha_{01}^4 + 12\lvert\alpha_{10}\rvert\alpha_{01}^2\alpha_{02} + 3\lvert\alpha_{10}\rvert\alpha_{02}^2$	$6\lvert\alpha_{10}\rvert\lvert\alpha_{01}\rvert^5 + 20\lvert\alpha_{10}\rvert\lvert\alpha_{01}\rvert^3\alpha_{02} + 12\lvert\alpha_{10}\rvert\lvert\alpha_{01}\rvert\alpha_{02}^2$
$n_1 = 2$	$\{10\alpha_{10}^2\lvert\alpha_{01}\rvert^3 + 12\alpha_{10}^2\alpha_{01}\alpha_{02} + 6\lvert\alpha_{01}\rvert\alpha_{20}\alpha_{02} + 4\lvert\alpha_{01}\rvert^3\alpha_{20}\}$	$\{15\alpha_{10}^2\alpha_{01}^4 + 30\alpha_{10}^2\alpha_{01}^2\alpha_{02} + 6\alpha_{10}^2\alpha_{02}^2 + 3\alpha_{20}\alpha_{02}^2 + 12\alpha_{10}^2\alpha_{20}\alpha_{02} + 5\alpha_{01}^4\alpha_{20}\}$	$\{21\alpha_{10}^2\lvert\alpha_{01}\rvert^5 + 60\alpha_{10}^2\lvert\alpha_{01}\rvert^3\alpha_{02} + 30\alpha_{10}^2\lvert\alpha_{01}\rvert\alpha_{02}^2 + 12\lvert\alpha_{20}\rvert\alpha_{02}^2 + 24\alpha_{10}^2\lvert\alpha_{01}\rvert\alpha_{20}\alpha_{02} + 6\lvert\alpha_{01}\rvert^5\alpha_{20}\}$
$n_1 = 3$	$\{20\lvert\alpha_{10}\rvert^3\lvert\alpha_{01}\rvert^3 + 20\lvert\alpha_{10}\rvert^3\lvert\alpha_{01}\rvert\alpha_{02} + 24\lvert\alpha_{10}\rvert\lvert\alpha_{01}\rvert\alpha_{20}\alpha_{02} + 20\lvert\alpha_{10}\rvert\lvert\alpha_{01}\rvert^3\alpha_{20}\}$	$\{35\lvert\alpha_{10}\rvert^3\alpha_{01}^4 + 60\lvert\alpha_{10}\rvert^3\alpha_{01}^2\alpha_{02} + 10\lvert\alpha_{10}\rvert^3\alpha_{02}^2 + 12\lvert\alpha_{10}\rvert\alpha_{20}\alpha_{02}^2 + 60\lvert\alpha_{10}\rvert\alpha_{01}^2\alpha_{20}\alpha_{02} + 30\lvert\alpha_{10}\rvert\alpha_{01}^4\alpha_{20}\}$	
$n_1 = 4$	$\{35\alpha_{10}^4\lvert\alpha_{01}\rvert^3 + 30\alpha_{10}^4\lvert\alpha_{01}\rvert\alpha_{02} + 60\alpha_{10}^2\lvert\alpha_{01}\rvert\alpha_{20}\alpha_{02} + 60\alpha_{10}^2\lvert\alpha_{01}\rvert^3\alpha_{20} + 12\lvert\alpha_{01}\rvert\alpha_{02}\alpha_{20}^2 + 10\lvert\alpha_{01}\rvert^3\alpha_{20}^2$		
⋮	⋮	⋮	⋮

	$n_2 = 6$	$n_2 = 7$
$n_1 = 0$	$\alpha_{01}^6 + 5\alpha_{01}^4\alpha_{02} + 6\alpha_{01}^2\alpha_{02}^2 + \alpha_{02}^3$	$\lvert\alpha_{01}\rvert^7 + 6\lvert\alpha_{01}\rvert^5\alpha_{02} + 10\lvert\alpha_{01}\rvert^3\alpha_{02}^2 + 4\lvert\alpha_{01}\rvert\alpha_{02}^3$
$n_1 = 1$	$7\lvert\alpha_{10}\rvert\alpha_{01}^6 + 30\lvert\alpha_{10}\rvert\alpha_{01}^4\alpha_{02} + 30\lvert\alpha_{10}\rvert\alpha_{01}^2\alpha_{02}^2 + 4\lvert\alpha_{10}\rvert\alpha_{02}^3$	
⋮	⋮	⋮

The sum of all unit sample response entries, i.e.,

$$S = \sum_{i=0}^{\infty} D_i$$

is identified as

$$S = \sum_{n=0}^{\infty} (\alpha_{20} + \alpha_{02})^n$$

$$+ (|\alpha_{10}| + |\alpha_{01}|) \sum_{n=0}^{\infty} n(\alpha_{20} + \alpha_{02})^{n-1}$$

$$+ (|\alpha_{10}| + |\alpha_{01}|)^2 \sum_{n=0}^{\infty} \frac{n(n-1)}{2!} (\alpha_{20} + \alpha_{02})^{n-2}$$

$$+ \quad \ldots$$

$$\vdots$$

But this is equal to

But this is equal to

$$S = \left[1 + (|\alpha_{01}| + |\alpha_{10}|)\frac{d}{d(\alpha_{20} + \alpha_{02})} + (|\alpha_{10}| + |\alpha_{01}|)^2 \frac{d^2}{d(\alpha_{20} + \alpha_{02})^2} + \ldots\right] \left\{ \sum_{n=0}^{\infty} (\alpha_{20} + \alpha_{02})^n \right\} \qquad \text{(I.12)}$$

where $\left[\ \right]$ designates, similarly as in the previous section, a weighted derivative operator. It is well known from geometric series theory that

$$\sum_{n=0}^{\infty} (\alpha_{20} + \alpha_{02})^n = \frac{1}{1 - (\alpha_{20} + \alpha_{02})} \qquad \text{(I.13)}$$

if and only if $|\alpha_{20} + \alpha_{02}| < 1$. Considering this fact (I.10) and after applying the weighted derivative operator, eq (I.12) becomes

$$S = \frac{1}{1 - (\alpha_{20} + \alpha_{02})} \sum_{n=0}^{\infty} \left\{ \frac{|\alpha_{10}| + |\alpha_{01}|}{1 - (\alpha_{20} + \alpha_{02})} \right\}^n$$

which converges to

$$S = \frac{1}{1 - (\alpha_{20} + \alpha_{02})} \cdot \frac{1}{1 - \left\{ \frac{|\alpha_{10}| + |\alpha_{01}|}{1 - (\alpha_{20} + \alpha_{02})} \right\}}$$

if and only if

$$|\alpha_{10}| + |\alpha_{01}| < |1 - (\alpha_{20} + \alpha_{02})|$$

But this can be rewritten since $|\alpha_{20}| + |\alpha_{02}| < 1$ as

$$\alpha_{20} + \alpha_{02} < 1 - |\alpha_{10}| - |\alpha_{01}|$$

q.e.d.

C. COUPLED FILTER: SECOND ORDER COUPLED (BILINEAR) FILTER

The sum of absolute entries of $\underline{\bar{A}}$ in column 0 is:

$$S_0 = \sum_{n_1=0}^{\infty} \alpha_{10}^{n_1}$$

converges to

$$S = \frac{1}{1 - \alpha_{10}} \text{ , if and only if } |\alpha_{10}| < 1$$

Similarly,

$$S_1 = \sum_{n_1=0}^{\infty} \left| (n_1+1)\alpha_{10}^{n_1}\alpha_{01} + n_1\alpha_{10}^{n_1-1}\alpha_{11} \right|$$

which can be rewritten, using derivative operator notation, as

$$S_1 = \sum_{n_1=0}^{\infty} \left| \frac{d}{d\alpha_{10}} (\alpha_{10}^{n+1}\alpha_{01} + \alpha_{10}^{n_1}\alpha_{11}) \right|$$

$$\geq \left| \frac{d}{d\alpha_{10}} (\alpha_{10}\alpha_{01} + \alpha_{11}) \sum_{n_1=0}^{\infty} \alpha_{10}^{n_1} \right|$$

$$= \left| \frac{1}{1 - \alpha_{10}} \left\{ \frac{\alpha_{10}\alpha_{01} + \alpha_{11}}{1 - \alpha_{10}} + \alpha_{01} \right\} \right|$$

For $n_2 = 2$:

$$S_2 = \sum_{n_1=0}^{\infty} \left| \frac{(n_1+1)(n_1+2)}{2} \alpha_{10}^{n_1}\alpha_{01}^{2} + n_1\alpha_{10}^{n_1-1}\alpha_{01}\alpha_{11}(n_1+1) + \frac{n_1(n_1-1)}{2} \alpha_{10}^{n_1-2}\alpha_{11} \right|$$

$$= \sum_{n_1=0}^{\infty} \left| \frac{d^2}{d\alpha_{10}^{2}} \left\{ \frac{1}{2} \alpha_{10}^{n_1+2}\alpha_{01} + \alpha_{10}^{n_1+1}\alpha_{01}\alpha_{11} + \frac{1}{2} \alpha_{10}^{n_1}\alpha_{11}^{2} \right\} \right|$$

$$\geq \left| \frac{1}{1 - \alpha_{10}} \left\{ \frac{\alpha_{10}\alpha_{01} + \alpha_{11}}{1 - \alpha_{10}} + \alpha_{01} \right\}^2 \right|$$

For $n_2 = 3$:

$$S_3 = \sum_{n_1=0}^{\infty} \left| \frac{(n_1+1)(n_1+2)(n_1+3)}{3!} \alpha_{10}^{n_1} \alpha_{01}^{3} + \frac{n_1(n_1+1)(n_1+2)}{2!} \alpha_{10}^{n_1-1} \alpha_{01}^{2} \alpha_{11} \right.$$

$$\left. + \frac{(n_1-1)n_1(n_1+1)}{2!} \alpha_{10}^{n_1-2} \alpha_{01} \alpha_{11} + \frac{(n_1-2)(n_1-1)(n_1)}{3!} \alpha_{10}^{n_1-3} \alpha_{11} \right|$$

$$\geq \left| \frac{1}{1 - \alpha_{10}} \left\{ \frac{\alpha_{10}\alpha_{01} + \alpha_{11}}{1 - \alpha_{10}} + \alpha_{01} \right\}^{3} \right|$$

Following the same computational scheme, S_j becomes

$$S_j \geq \left| \frac{1}{1 - \alpha_{10}} \left\{ \frac{\alpha_{10}\alpha_{01} + \alpha_{11}}{1 - \alpha_{10}} + \alpha_{01} \right\}^{j} \right| \qquad \text{(I.14)}$$

Since $|\alpha_{10}| < 1$, eq (I.14) can be written as follows

$$S_j \geq \frac{1}{1 - \alpha_{10}} \left| \left\{ \frac{\alpha_{10}\alpha_{01} + \alpha_{11}}{1 - \alpha_{10}} + \alpha_{01} \right\}^{j} \right|$$

APPENDIX K

SUMMATION OF DOUBLE SERIES (CAUCHY)

Cauchy, in his note VIII of Analyse Algébrique and §8 of the Résumés Analytiques [54], has defined for the two-variable case several methods of forming the sum of a double series, of which three are of importance for the derivation of stability conditions in two-dimensions.

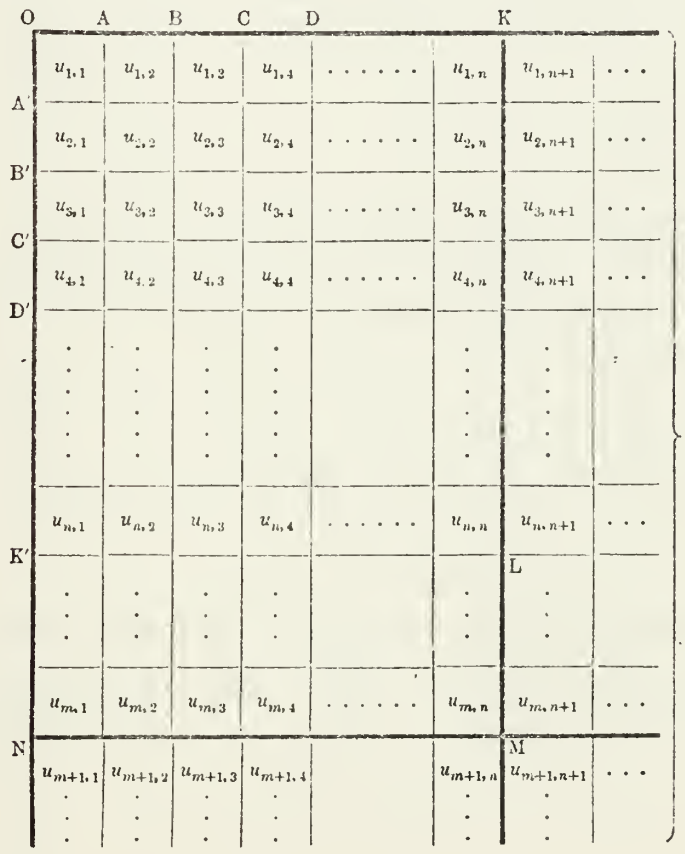

(K.1)

First way: Sum to n terms each of the series formed by taking all terms in the first m rows of (K.1), where the sum of the first, m^{th} row is $T_{1,n}, T_{m,n}$ respectively. Define

$$S'_{m,n} = T_{1,n} + \ldots + T_{m,n}$$

Now, supposing each horizontal series to converge to $T_1, \ldots, T_m$ and $\sum T_m$ to be a convergent series, where

$$S' = \sum_{m=0}^{\infty} T_m = \lim_{m\to\infty} \left\{ \lim_{n\to\infty} S'_{m,n} \right\}$$

Second way: Sum to m terms each of the series in the first n columns, and let the sums be $U_{1,m}, \ldots, U_{n,m}$. Define

$$S''_{m,n} = U_{1,m} + \ldots + U_{n,m}$$

as a finite sum. When the vertical series converge to $U_1, \ldots, U_n$ respectively and $\sum U_n$ to be a convergent series, then

$$S'' = \sum_{n=0}^{\infty} U_n = \lim_{n\to\infty} \left\{ \lim_{m\to\infty} S''_{m,n} \right\}$$

Third way: Sum the terms which lie in the successive diagonal lines of the array, namely $AA', \ldots, KK'$ and let the sums be $D_2, \ldots, D_{n+1}$ respectively, i.e.,

$$\begin{aligned} D_2 &= u_{1,1} \\ D_3 &= u_{1,2} + u_{2,1} \\ &\vdots \\ D_{n+1} &= u_{1,n} + u_{2,n-1} + \cdots + u_{n,1} \end{aligned}$$

Define $S_n''' = D_2 + \ldots + D_n$ as the finite sum. Supposing D_n to be convergent, then

$$S''' = \sum_{n=2}^{\infty} D_n$$

Cauchy's Theorem: Absolute Convergency of a Double Series

Theorem: If all the horizontal series of

$$\{ | u(n,m) | \}$$

be convergent, then

1st: The horizontal series of

$$\sum u(n,m)$$

are all absolutely convergent, and the sum of their sums to infinity converges to a definite finite S.

2^{nd}: All vertical series converge absolutely and the sum of their sums to infinity converges to S.

3^{rd}: The diagonal series is absolutely convergent and converges to S.

Similar conclusions follow, if all the vertical or if the diagonal series of

$$\{| u(n,m) |\}$$

be convergent.

[Proof in Analyse Algébrique]

It can be concluded if one condition is found for which the entries of a double series converge absolutely, then the double series converges absolutely in every way the mathematical operation is performed.

APPENDIX L

PROOF THEOREM APPENDIX I

For

$$H(z_1,z_2) = \frac{1}{1 - \alpha_{10} z_1^{-1} - \alpha_{01} z_2^{-1} - \alpha_{20} z^{-2}}$$

let

$$H(z_1,z_2) = \sum_{n_1=0}^{\infty} \sum_{n_2=0}^{\infty} h(n_1,n_2)\, z_1^{-n_1}\, z_2^{-n_2} \qquad \text{(L.1)}$$

Also

$$H(z_1,z_2) = \frac{1}{g(z_1)\left(1 - \frac{h(z_2)}{g(z_1)}\right)}$$

$$= \sum_{n_2=0}^{\infty} \left(\frac{1}{1 - \alpha_{10} z_1^{-1} - \alpha_{20} z_1^{-2}}\right)^{n_2+1} \alpha_{01}^{n_2}\, z_2^{-n_2} \qquad \text{(L.2)}$$

Equating eq (L.1) and (L.2) results in

$$\sum_{n_1=0}^{\infty} \sum_{n_2=0}^{\infty} h(n_1,n_2)\, z_1^{-n_1} z_2^{-n_2} = \sum_{n_2=0}^{\infty} \sum_{n_1=0}^{\infty} h(n_1,0) z_1^{-n_1} \Big)^{n_2+1} \alpha_{01}^{n_2}\, z_2^{-n_2}$$

Taking the absolute values of the corresponding coefficients and applying the triangle inequality leads for $z_1 = z_2 = 1$ to

$$\sum_{n_1=0}^{\infty}\sum_{n_2=0}^{\infty} |h(n_1,n_2)| \leq \sum_{n_1=0}^{\infty}\sum_{n_2=0}^{\infty} |h(n_1,0)|^{n_2+1} |\alpha_{01}|^{n_2}$$

q.e.d.

APPENDIX M

ROUCHE'S THEOREM AND PROOFS OF CHAPTER VI

The proofs in this appendix and the following consequence of Rouche's Theorem are made by applying methods of [53].

A. CONSEQUENCE OF ROUCHE'S THEOREM

Theorem M1: Let $f(z) = a_0 + a_1 z + \ldots + a_n z^n$ for $n > 1$, be a polynomial with complex coefficients. Define $g(z) = b_0 + b_1 z + \ldots + b_{n-1} z^{n-1}$, where $b_j = a_0^* a_j - a_n a_{n-j}^*$, $j = 0,\ldots,n-1$. Then $f(z)$ is stable if and only if

$$|a_n| < 1 \quad \text{and} \quad g(z) \quad \text{is stable.}$$

B. PROOF OF THEOREM 6.1

For $Q(\bar{z})$ as defined in eq (6.15), then for each vector $\bar{\gamma} = (\gamma_1,\ldots,\gamma_N)$, where γ_i is a complex number, $q_{\bar{\gamma}}(z)$ is defined as

$$q_{\bar{\gamma}}(z) = Q(\bar{\gamma} z) .$$

Theorem M.2: The polynomial $Q(\bar{z})$ is stable if and only if for all $\bar{\gamma}$, where $\max |\gamma_i| = 1$, $q_{\bar{\gamma}}(z)$ is stable.

Proof, Theorem M2: (see also [73])

$Q(\bar{z})$ is assumed to be stable. If $q_{\bar{\gamma}}(z)$ is not stable for some $\bar{\gamma}$, then $q_{\bar{\gamma}}(^{\circ}z) = 0$ for the magnitude of $^{\circ}z$ inside the unit disc, i.e. $|^{\circ}z| \leq 1$. Hence $Q(^{\circ}z\bar{\gamma}) = Q(^{\circ}z\gamma_1,\ldots,^{\circ}z\gamma_N) = 0$. But $|^{\circ}z\gamma_i| \leq 1$, which is a contradiction on the assumed stability of $Q(\bar{z})$.

Conversely, assume

$$q_{\bar{\gamma}}(z) = Q(\gamma_1 z,\ldots,\gamma_N z)$$

is stable for all $\bar{\gamma}$, with $\max|\gamma_i| = 1$. If $Q(^{\circ}z_1,\ldots,^{\circ}z_N) = 0$ for $|^{\circ}z_i| \leq 1$, then $q_{\bar{\gamma}}(r) = Q(\gamma_1 r,\ldots,\gamma_N r) = 0$ where $r = \max|^{\circ}z_i|$ and $r\cdot\gamma_i = {}^{\circ}z_i$, which is a contradiction. q.e.d.

For z complex, and $q_1(z) = Q(z)$, where Q is associated with $(A_1,\ldots,A_k)$, it follows that the unique leading coefficient of $q_1(z)$ is

$$w = \sum_{A_j \varepsilon A} A_j$$

i.e., the sum of the leading coefficients of Q.

The polynomial $q_1(z)$ factors:

$$q_1(z) = w(z-t_1)\cdots(z-t_k)$$

where $t_1,\ldots,t_k$ are the complex roots.

If $(A_1,\ldots,A_k)$ is stable, then $Q(\bar{z})$ is, and hence it follows by the previous theorems that

$$|t_i| > 1 \quad \text{for} \quad i = 1,\ldots,k$$

But $$1 = |q_1(0)| = |w| \left| \prod_{i=1}^{k} t_i \right|$$

where $$\left| \prod_{i=1}^{k} t_i \right| > 1$$

Therefore $$|w| = \left| \sum_{A_j \varepsilon A} A_j \right| < 1$$

q.e.d.

C. PROOF OF THEOREM 6.2 AND THEOREM 6.3

This proof is very similar to the previous one.

Let $q(z) = Q(r_1 z,\ldots,r_N z)$ [see eq 6.15]

then $$q(1) = 1 - \sum_{i=1}^{k} A_i(r_1,\ldots,r_N)^{\overline{s}_i}$$

$$= 1 - \sum_{i=1}^{k} A_i p_i$$

If $\sum_{i=1}^{k} A_i p_i \geq 1$

then

$$q(1) \leq 0$$

but $q(0) = Q(0,\ldots,0) = 1$.

Hence by intermediate value theorem of one variable calculus there exists z_0

$$0 < z_0 \leq 1$$

such that

$$q(z_0) = 0$$

But $|z_0 \cdot r_i| < 1$ for $i = 1,\ldots,N$ where $r_i = 0,+1,-1$ and this contradicts the hypothesis that $(A_1,\ldots,A_k)$ and hence Q is stable.

q.e.d.

D. PROOF THEOREM 6.5

The proof is similar to the previous ones.

Let $Q(z_1,\ldots,z_N)$ be the polynomial associated with $(A_1,\ldots,A_k)$. Define the polynomial $Q'(z_1,\ldots,z_N)$ by

$$Q'(z_1,\ldots,z_N) = Q(\delta_1 z_1,\ldots,\delta_N z_N)$$

It is not difficult to check that Q' is the polynomial associated with $(A_1',\ldots,A_K')$ if the A_j' are related to the A_j as above. Of course, A_j's are real numbers if the p_j and A_j are. Finally it is immediate that Q' is stable if Q is, since $|\delta_i| \equiv 1$. Therefore, $(A_1,\ldots,A_K)$ is stable if $(A_1',\ldots,A_K')$ is stable.

q.e.d.

APPENDIX N

PROOFS OF CHAPTER VII

A. PROOF THEOREM 7 [See [73]).

Assume $q_{\overline{\delta}}(z_0)$ is unstable, i.e., $q_{\overline{\delta}}(z_0) = 0$ and $|z_0| \leq 1$. If $Q(\overline{z})$ is stable, then

$$Q(z_0 \frac{\delta_1}{r} , \ldots , z_0 \frac{\delta_N}{r}) = 0$$

where $\left|\frac{z_0 \delta_i}{r}\right| > 1$ for some i , then $|z_0| > \left|\frac{r}{\delta_i}\right| > 1$

which is a contradiction.

If $Q(\overline{z})$ is unstable it follows that there is a $(\delta_1,\ldots,\delta_N)$ where $\max |\delta_i| \leq 1$ and $Q(\delta_1,\ldots,\delta_N) = 0$. If $q_{\overline{\delta}}(z)$ is stable, i.e.

$$q_{\overline{\delta}}(z) = Q \left(\frac{z\delta_1}{r} , \ldots , \frac{z\delta_N}{r}\right)$$

where $r = \max |\delta_i|$

then $q_{\overline{\delta}}(r) = 0$.

But, $r \leq 1$ which is a contradiction.

B. PROOF OF COROLLARY 7

Assume as in the previous proof that $q_{\delta}(z_0)$ is unstable, i.e. $q_{\delta}(z_0) = 0$ for $|z_0| \leq 1$.

If $Q(\bar{z})$ is stable, then

$$Q(z_0\delta_1,\ldots,z_0\delta_N) = 0$$

where

$$|z_0\delta_i| > 1 \quad \text{for some} \quad i$$

or

$$|z_0| > \frac{1}{|\delta_i|} > 1$$

which is a contradiction.

If $Q(z)$ is unstable there exists a $(\delta_1,\ldots,\delta_N)$ such that $\max |\delta_i| \leq 1$.

Let $(\delta_1',\ldots,\delta_N') = (\frac{\delta_1}{r}, \ldots, \frac{\delta_N}{r})$

where $r = \max |\delta_i|$

Let $q_{\bar{\delta}'}(z) = Q(z\delta_1',\ldots,z\delta_N')$

Then $q_{\bar{\delta}'}(r) = Q(\delta_1,\ldots,\delta_N) = 0$

but $r \leq 1$ which is a contradiction.

LIST OF REFERENCES

1. Oppenheim, A. V. and Schafer, R. W., Digital Signal Processing, Prentice Hall, Englewood Cliffs, New Jersey, 1975.

2. Rabiner, L. and Gold, B., Theory and Application of Digital Signal Processing, Prentice Hall, Englewood Cliffs, New Jersey, 1975.

3. Rabiner, L. R., et al., "Terminology in Digital Signal Processing", Literature in Digital Signal Processing, IEEE Press, p. 3-18, 1973.

4. Kaiser, J. F., "Digital Filter" in F. F. Kno and J. F. Kaiser Eds., System Analysis by Digital Computer, Chap. 7, John Wiley & Sons, Inc., New York, 1966.

5. Stockham, T. G., "High Speed Convolution and Correlation", AFIPS Conference Proceedings, 28, pp. 229-233, 1966.

6. Hall, E. L., "A Comparison of Computations for Spatial Frequency Filtering", Proc. IEEE (Special Issue on Digital Picture Processing), Vol. 60, p. 887-891, July 1972.

7. Huang, T. S., "Two-Dimensional Windows", IEEE Trans. Audio Electroacoust. (Corresp.), Vol. AU-20, p. 88-89, March 1972.

8. Hu, J. V., and Rabiner, L. R., "Design Techniques for Two-Dimensional Digital Filters", IEEE Trans. Audio Electroacoust. (Special Issue on Digital Filtering), vol. AU-20, P. 249-257, Oct. 1972.

9. Arazi, B., "Two-Dimensional Digital Processing of One-Dimensional Signals", Trans. Acoustic, Speach and Signal Processing, vol. ASSP-22, April 1974.

10. Kamp, Y. and Thiran, J. P., "Maximally Flat Nonrecursive Two-Dimensional Digital Filters", IEEE Trans. Circuits Syst., vol. CAS-21, p. 437-449, May 1974.

11. "Chebyshev Approximation for Two-Dimensional Non-recursive Digital Filters", (to be published in 1975).

12. Shanks, J. L., Treitel, S., and Justice, J. H., "Stability and Synthesis of Two-Dimensional Recursive Filters", IEEE Trans. Audio Electroacoust., vol. AU-20, p. 115-128, June 1972.

13. Huang, T. S., "Stability of Two Dimensional Recursive Filters", IEEE Trans. Audio Electroacoust., vol. AU-20, p. 158-163, June 1972.

14. Ni, M. D., and Aggarwal, J. K., "Two-Dimensional Digital Filtering and its Error Analysis", Report, University of Texas, Fall 1974.

15. Mitra, S. K., Sagar, A. D., and Pendergass, N. A., "Realization of Two-Dimensional Recursive Digital Filters", Trans. Circuits and Systems, vol. CAS-22, March 1975.

16. Selzer, R. H., "Improving Biomedical Image Quality with Computers", NASA Tech. Rep. 32-1336, 1968.

17. O'Handley, D. A. and Green, W. B., "Recent Developments in Digital Image Processing at the Image Processing Laboratory at the Jet Propulsion Laboratory", Proc. IEEE, Vol. 60, p. 887-891, 7. 1972.

18. "Digital Image Restoration and Enhancement", Part B of Special Issue of Proceedings of the IEEE, vol. 60, No. 7, 7. 1972.

19. Treitel, S., Shanks, J. L., and Frasier, C. W., "Some Aspects of Fan Filtering", Geophysics, vol. 32, p. 789-800, Oct. 1967.

20. Zurflueh, E. G., "Applications of Two-Dimensional Linear Wavelength Filtering", Geophysics, vol. 32, p. 1015-1035, Dec. 1967.

21. Steiglitz, K., General Theory of Digital Filters with Applications to Spectral Analysis, Technical Report 400-99, AFDSR 64-1664, May 1963.

22. Steiglitz, K., An Introduction to Discrete Systems, John Wiley and Sons, New York, 1974.

23. Ansell, H. G., "On Certain Two-Variable Generalizations of Circuit Theory with Applications to Networks of Transmission Lines and Lumped Reactances", IEEE Trans., CT-11 (1964), p. 214-223, 1964.

24. Anderson, R. D. O., and Jury, E. I. "Stability Test for Two-Dimensional Recursive Filters", IEEE Trans., AU-21 (1973), p. 366-372, 1973.

25. Hermite, C., "Sur le nombre des racines d'une equation algebrique comprise entre des limites donnees", J. Reine Agnen., Math., 52, pp. 39-51, 1854.

26. Siljak, D. D., Comment on "Stability Test for Two-Dimensional Recursive Filters" by Anderson and Jury, IEEE Transactions on Acoustic, Speech and Signal Processing, Vol. ASSP-22, Dec. 1974.

27. Singh, Panwar, Sturm Test Algorithm for Digital Computer, IEEE Transactions on Circuits and Systems (Corresp), Jan 1975.

28. Bose, N. K., and Kamat, P. S., "Algorithm for Stability Test of Multidimensional Filters", IEEE, ASSP-22, No. 5, Oct. 1974.

29. Marden, Geometry of Polynomials, American Mathematical Society, Providence, R. I., 1966.

30. Siljak, D. D., "New Algebraic Criteria for Positive Realness", J. Franklin Inst., 291(1971), p. 109-120, 1971.

31. "Stability Criteria for Two Variable Polynomials", Report No. N62 05-017-010-7401, University of Santa Clara, 1974.

32. "Algebraic Criteria for Positive Realness Relative to the Unit Circle", J. Franklin Inst., 295(1973), p. 469-476, 1973.

33. Ozaki, H., and Kasami, T., "Positive Real Functions of Several Variables and Their Applications to Variable Networks", IRE Trans., CT-7 (1960), p. 251-260, 1960.

34. Schaldach, V. H. D., "A Computer Algorithm to Test for Positive Realness", M. S. Thesis, University of Santa Clara, California, 1973.

35. Bose, N. K., and Jury, E. I., Positivity and Stability for Multidimensional Filters (Discrete-Continuous), IEEE Transactions on Acoustic, Speech and Signal Processing, Vol. ASSP-22, June 1974.

36. Jury, E. I., Inners and Stability of Dynamic Systems, Wiley-Interscience, New York, 1974.

37. Grindon, C., "State Variable Approach to Digital Filtering", Proc. UMR-Kelly Communication Conf., University of Missouri at Rolle, Oct. 5-7, 1970.

38. Parker, S. R. and Hess, S., "Canonic Realizations of Second-Order Digital Filters Due to Finite Precision Arithmetic", IEEE Trans. Circuit Theory (Corresp.), vol. CT19, p. 410-413, July 1972.

39. Parker, S. R., and Hess, S., "Limit-Cycle Oscillations in Digital Filters", IEEE Trans. Circuit Theory, Vol. CT18, p. 687-697, Nov. 1971.

40. Hess, S., A Deterministic Analysis of Limit Cycle Oscillations in Recursive Digital Filters Due to Quantization, Ph.D. Thesis, Naval Postgraduate School, Monterey, California, Dec. 1970.

41. Jackson, L. B., "An Analysis of Roundoff Noise in Digital Filters", Sc.D. Thesis, Stevens Institute of Technology, Hoboken, N. J., 1967.

42. Parker, S. R., Girard, P. E., and Souchon, L., "The Effects of Correlation and Structure on Quantization Noise in Digital Filters", Arden House Workshop on Digital Signal Processing, IEEE Group on Order, Speech, and Signal Processing, February 1974.

43. Girard, P. E., "Correlated Noise Effects of Structure in Digital Filters", Ph.D. Thesis, Naval Postgraduate School, Monterey, California, June 1974.

44. Parker, S. R. and Yakowitz, S., "A General Method for Calculating Quantization Error Bounds in Fixed Point Multivariable Digital Filters", IEEE Transactions on Circuits and Systems, November 1974.

45. Yakowitz, S. and Parker S. R., "Computation of Bounds for Digital Filter Quantization Errors", IEEE Transactions on Circuit Theory, vol. CT-20, No. 4, p. 391-396, July 1973.

46. Sandberg, I. W., and Kaiser, J. F., "A Bound on Limit Cycles in Fixed Point Implementations of Digital Filters", IEEE Trans. Audio Electro. Acoust., vol. AU-2, p. 110-112, June 1972.

47. Fettweis, A., "Some Principles of Designing Digital Filters Imitating Classical Filter Structures", IEEE Trans. Circuit Theory, vol. CT-18, p. 314-316, March 1971.

48. Fettweis, A., "A General Theorem for Signal-Flow Networks, with Applications", Archiv. Elect. Ubertrag., vol. 25, no. 12, p. 557-561, December 1971.

49. Fettweis, A., "Digital Filter Structures Related to Classical Filter Networks", Archiv. Elect. Ubertrag, vol. 25, p. 79-89, 1971.

50. Bruton, L. T., "Low Sensitivity Digital Ladder Filters", IEEE Trans. Circuits and Systems, vol CAS-22, March 1975.

51. Mitra, S. K. and Sherwood, R. J., "Canonic Realization of Digital Filters Using Continued Fraction Expansion", IEEE Trans. Audio and Electroacoust., vol AU-20, no. 3, p. 185-194, August 1972.

52. Selby, M. S., "Standard Mathematical Tables", The Chemical Rubber Co., p. 455, 1970.

53. Davis, D. L., Private communication, Department of Mathematics, Naval Postgraduate School, Monterey, 1975.

54. Chrystal, T., "Textbook of Algebra", Chelsea Publishing Co., vol. 1, p. 140ff, 1886.

55. Abramowitz, M. and Stegun, L. A., Handbook of Mathematical Functions, AMS 55, National Bureau of Standards.

56. Apple, U., "Bounds on Second-Order Filter", unpublished, 1971.

57. Gold, B. and Rader, C. M., Digital Processing of Signals, McGraw-Hill, New York, 1969.

58. Costa, J. M., and Venetsanopoulos, A. N., "Design of Circularly Symmetric Two-Dimensional Recursive Filters", Trans. Acoustic, Speech and Signal Processing, vol. ASSP-22, December 1974.

59. Perkins, W. R., and Cruz, J. R., "Engineering of Dynamic Systems", J. Franklin Inst., 291(1971), p. 109-120, 1971.

60. Über einige bestimmte Integrale, Sitzungsberichte der mathematisch-natur-wissenschaftlichen Klasse der Akademie der Wissenschaften in Wien, Abteilung IIa, vol. 70 (1874), p. 433-443.

61. Über die Functionen $C_n^{\nu}(x)$. Ibid., vol. 75 (1877), p. 891-905.

62. Über die Functionen $C_n^{\nu}(x)$. Ibid., vol. 97 (1888), p. 259-270.

63. Zur Theorie der hypergeometrischen Reihe. Ibid., vol. 100 (1891), p. 225-244.

64. Das Additionstheorem der Functionen $C_n^{\nu}(x)$. Ibid, vol. 102 (1893), p. 942-950.

65. Zur Theorie der Functionen $C_n^{\nu}(x)$. Denkschriften der Akademie der Wissenschaften in Wien, Mathematisch-naturwissenschaftliche Klasse, vol. 48 (1884), p. 293-316.

66. Einige Sätze über die Functionen $C_n^{\nu}(x)$. Ibid., vol. 57 (1890), p. 425-480.

67. Mitra, S. K., et al., "Realization of Two-Dimensional Recursive Digital Filters", IEEE Transactions on Circuits and Systems, vol. CAS-22, March 1975.

68. Aggarwal, J. K., "Input Quantization and Arithmetic Roundoff in Digital Filters - A Review", Techn. Report No. 130, July 1972.

69. Long, J. L., and Trick, T. N., "An Absolute Bound on Limit Cycles Due to Roundoff Errors in Digital Filters", IEEE Trans. on Audio and Electroacoustics, AU-21, p. 27-30, February 1973.

70. Ni, M. D. and Aggarwal, F. K., Two-Dimensional Digital Filtering and Its Error Analysis, Report AFD SR 72-2371, 1974.

71. Jury, E. I., Theory and Application of the Z-Transform Method, John Wiley and Sons, New York, 1964.

72. Schüssler, M. W., Digitale Systeme zur Signalverarbertung, Springer Verlag, Berlin , 1973.

73. D. Davis, and L. Souchon, "Necessary and Sufficient Stability Conditions for N-Dimensional Recursive Digital Filter of any Order", Proc. Ninth Asilomar Conference on Circuits, Systems, and Computers, Pacific Grove, California, Nov. 1975.

74. L. Souchon, "Time and Frequency Design Techniques for an N-Dimensional Recursive Digital Filter", Ninth Asilomar Conference on Circuits, Systems, and Computers, Pacific Grove, California, Nov. 1975.

75. D. Davis and L. Souchon, "Comments on Huang's Proof for the Bilinear Stability Conditions", to be published.

INITIAL DISTRIBUTION LIST

		No. Copies
1.	Marineamt - A1 294 Wilhelmshaven Federal Republic of Germany	1
2.	Dokumentations Zentrale der Bundeswehr (W) 53 Bonn Friederich Ebert Alee 34 Federal Republic of Germany	1
3.	Library, Code 0212 Naval Postgraduate School Monterey, California 93940	2
4.	Professor C. H. Rothauge Acting Department Chairman, Code 52 Department of Electrical Engineering Naval Postgraduate School Monterey, California 93940	1
5.	Professor S. R. Parker Dean of College of Engineering Rutgers University Busch Campus New Brunswick, New Jersey 08903	1
6.	Assist. Professor Daniel Davis Department of Mathematics Naval Postgraduate School Monterey, California 93940	1
7.	LCDR (FGN) Lennart Souchon Am Thingplatz 7, 2392 Gluecksburg Federal Republic of Germany	1
8.	Professor A. Fettweis Ruhr Universitat Bochum 463 Bochum Federal Republic of Germany	1
9.	Professor Schussler Institut fur Nachrichtentechnik Universitat Erlangen 8520 Erlangen Federal Republic of Germany	1
10.	Defense Documentation Center Alexandria, Virginia 22314	2

Thesis 165001
S66612 Souchon
c.1 Structures, analysis and design of N-dimensional recursive digital filters.
30 JAN 86 13817

Thesis 165001
S66612 Souchon
c.1 Structures, analysis and design of N-dimensional recursive digital filters.

thesS66612
Structures, analysis and design of N-dim
3 2768 001 00813 9
DUDLEY KNOX LIBRARY